LANDER COUNTY COMMISSION MEETING
June 28, 2011

AGENDA ITEM NO. 1

THE REQUESTED ACTION OF THE LANDER COUNTY COMMISSION IS TO:
Discuss and approve/disapprove Resolution No. 2011-09, a resolution certifying the Ad Valorem (property) tax rate required for the fiscal year July 1, 2011 through June 30, 2012 in accordance with NRS 361.460 and other matters properly relating thereto.

Public comment.

Background:

Resolution No. 2011-09, a resolution certifying the Ad Valorem (property) tax rate required for the fiscal year July 1, 2011 through June 30, 2012 in accordance with NRS 361.460, is presented for Commission consideration.

Pursuant to the provisions of Nevada Revised Statutes (NRS) 361.460, Resolution No. 2011-09, a resolution certifying the Ad Valorem (property) tax rates required for the Lander County, Lander County School District, Lander County Hospital District, Town of Austin, Town of Battle Mountain, Town of Kingston and the Lander County Combined Water and Sewer District #2 Fiscal Year 2011 – 2012 budgets, is presented for the purpose of levying the specific ad valorem (property) tax rates by the Board of County Commissioners. The statute provides that each of the Boards of County Commissioners within the state of Nevada shall hold a meeting to levy the ad valorem (property) tax rates as certified by the Nevada Tax Commission.

Lander County Treasurer Grace Powrie will present the Resolution and the schedule of ad valorem (property) tax rates to the Commission.

Recommended Action:

It is recommended that the Commission approve and adopt Resolution No. 2011-09, a Resolution certifying the Ad Valorem (property) tax rates required for Lander County, Lander County School District, Lander County Hospital District, Town of Austin, Town of Battle Mountain, Town of Kingston and the Lander County Combined Water and Sewer District #2 for the fiscal year July 1, 2011 through June 30, 2012 in accordance with NRS 361.460.

AGENDA REQUEST FORM

MEETING DATE: **June 28, 2011**

Name: *Grace Powrie* **Representing:** *Lander County Treasurer*

Address: *315 South Humboldt Street, Battle Mountain, Nevada 89820*

Phone:(H) *775-635-5882* *(w)775-635-5127* **Fax:** *775-635-5593*

WHICH NUMBER SHOULD WE CALL DURING NORMAL BUSINESS HOURS: *WORK*

WHO WILL BE ATTENDING THE MEETING: *Grace Powrie*

JOB TITLE: *Lander County Treasurer*

SPECIFIC REQUEST TO BE PLACED ON THE AGENDA:

To approve/disapprove Resolution #2011-09 to levy the 2011-12 tax rates and other matters properly relating thereto

WHAT ACTION WOULD YOU LIKE THE BOARD TO TAKE TO RESOLVE THIS ISSUE?

Approve Resolution #2011-09 to levy the 2011-12 tax rates

ARE THERE ANY COSTS ASSOCIATED WITH YOUR REQUEST? YES (NO)

AMOUNT:

HAS THIS ISSUE BEEN DISCUSSED AT A PRIOR COMMISSION MEETING? YES (NO)

WHEN?

WILL YOU BE PRESENTING WRITTEN INFORMATION AT THE MEETING? (YES) NO

HAVE YOU DISCUSSED THIS ISSUE WITH THE AFFECTED DEPT HEAD? (YES) NO

FOR REVIEW BY:

CLERK	xxxx	SHERIFF		J.P.	
ASSESSOR	xxxx	WELFARE		D.A.	xxxx
BUILDING		PLANNING		TREASURER	xxxx
AIRPORT		RECORDER		SWIM POOL	
R & B				HOSPITAL	
PUB WORKS		GOLF		CIVIC CENTER	
FAIR/REC		EXECUTIVE DIRECTOR	xxxx	FINANCE DIRECTOR	xxxx

THE COUNTY EXECUTIVE DIRECTOR RESERVES THE RIGHT TO REJECT OR RECOMMEND TABLING ALL AGENDA REQUESTS FOR INSUFFICIENT INFORMATION.

ALL INFORMATION STATED IS CORRECT AND TRUE TO MY KNOWLEDGE.....

Grace Powrie

MEETING DATE: **June 28, 2011**

#1

I move to approve Resolution # 2011-09, per NRS 361.460. The Board of County Commissioners of Lander County, now, that the Nevada Tax Commission has certified the combined ad valorem (property) tax rate, that the levy of taxes in Lander County for the fiscal period beginning July 1, 2011 through June 30, 2012, shall be in accordance with the following schedule for each fund on $100 of property:

State	.1700
County	1.9243
School	.7500
Hospital	.5109
BASE	3.3552

SPECIALS:

Sewer & Water District #2	.0677
Austin Town	.2213
Battle Mountain Town	.0500
Kingston Town	.3048

DOC # 0261291
06/29/2011 09:50 AM
Official Record
Recording requested By
LANDER COUNTY CLERK
Lander County - NV
Idonna Trevino - Recorder
Fee: Page 1 of 2
RPTT: Recorded By: SN
Book- 623 Page- 0759
0261291

RECORDING REQUEST BY:

Lander County Clerk

315 South Humboldt Street

Battle Mountain, Nevada 89820

RESOLUTION NO 2011-09 CERTIFYING AD VALOREM (PROPERTY) TAX RATE

FOR FISCAL YEAR 2011-12

TITLE OF DOCUMENT

This page added to provide additional information required by NRS 111.312 Section 1-2.
This cover page must be typed or printed.

RESOLUTION NO. 2011-09
OF THE BOARD OF LANDER COUNTY COMISSIONERS

A Resolution by the Lander County Commissioners, State of Nevada, Certifying the Ad Valorem (property) Tax Rate Required for the Fiscal Year July 1, 2011 through June 30, 2012 in Accordance with NRS 361.460.

WHEREAS, NRS 361.460 states, " Immediately after the Nevada Tax Commission shall certify the combined tax rate, the Board of County Commissioners shall by resolution proceed to levy the tax rate required for the fiscal period beginning the succeeding July 1, designating the number of cents of each $100 of property levied for each fund."

NOW, THEREFORE, IT IS HEREBY RESOLVED by the Board of County Commissioners of Lander County, now, that the Nevada Tax Commission has certified the combined tax rate, that the levy of taxes in Lander County for the fiscal period beginning July 1, 2011, shall be in accordance with the following schedule for each fund on $100 of property:

State	.1700
County	1.9243
School	.7500
Hospital	.5109
BASE	3.3552
SPECIALS:	
Sewer & Water District #2	.0677
Austin Town	.2213
Battle Mountain Town	.0500
Kingston Town	.3048

PASSED AND ADOPTED this 28th day of June, 2011.

THOSE VOTING AYE: Commissioner Steven Stienmetz
Commissioner Dean Bullock
Commission Dave Mason
Commissioner Brian Garner
Commissioner Ray Williams Jr.

THOSE VOTING NAY: None
THOSE ABSENT: None

STEVEN STIENMETZ, CHAIR OF THE LANDER COUNTY COMMISSIONS

ATTEST: Sadie Sullivan
Sadie Sullivan
Lander County Clerk

RESOLUTION NO. 2011-09
OF THE BOARD OF LANDER COUNTY COMISSIONERS

A Resolution by the Lander County Commissioners, State of Nevada, Certifying the Ad Valorem (property) Tax Rate Required for the Fiscal Year July 1, 2011 through June 30, 2012 in Accordance with NRS 361.460.

WHEREAS, NRS 361.460 states, " Immediately after the Nevada Tax Commission shall certify the combined tax rate, the Board of County Commissioners shall by resolution proceed to levy the tax rate required for the fiscal period beginning the succeeding July 1, designating the number of cents of each $100 of property levied for each fund."

NOW, THEREFORE, IT IS HEREBY RESOLVED by the Board of County Commissioners of Lander County, now, that the Nevada Tax Commission has certified the combined tax rate, that the levy of taxes in Lander County for the fiscal period beginning July 1, 2011, shall be in accordance with the following schedule for each fund on $100 of property:

State	.1700
County	1.9243
School	.7500
Hospital	.5109
BASE	3.3552
SPECIALS:	
Sewer & Water District #2	.0677
Austin Town	.2213
Battle Mountain Town	.0500
Kingston Town	.3048

PASSED AND ADOPTED this 28th day of June, 2011.

THOSE VOTING AYE: Commissioner Steven Stienmetz
Commissioner Dean Bullock
Commission Dave Mason
Commissioner Brian Garner
Commissioner Ray Williams Jr.

THOSE VOTING NAY: None

THOSE ABSENT: None

STEVEN STIENMETZ, CHAIR OF THE
LANDER COUNTY COMMISSIONS

ATTEST: _____

Sadie Sullivan
Lander County Clerk

LANDER COUNTY COMMISSION MEETING
June 28, 2011

AGENDA ITEM NO. 2

THE REQUESTED ACTION OF THE LANDER COUNTY COMMISSION IS A:
Discussion and possible action regarding surplus sale of June 15, 2011: a) results of sale; b) excess items; c) designation of a surplus building; and other matters properly relating thereto.

Public Comment.

Background:

Discussion regarding the Lander County surplus sale of June 15, 2011, including: a) results of sale; b) excess items, and; c) designation of a surplus building, is brought before the Commission for consideration.

Lander County Treasurer Grace Powrie will present information to the Commission on this item.

Recommended Action:

Treasurer Powrie will make any recommendations for action by the Commission on this item.

AGENDA REQUEST FORM

MEETING DATE: *June 28, 2011*

Name: *Grace Powrie* **Representing:** *Lander County Treasurer*

Address: *315 South Humboldt Street, Battle Mountain, Nevada 89820*

Phone:(H) *775-635-5882* *(w)775-635-5127* **Fax:** *775-635-5593*

WHICH NUMBER SHOULD WE CALL DURING NORMAL BUSINESS HOURS: *WORK*

WHO WILL BE ATTENDING THE MEETING: *Grace Powrie*

JOB TITLE: *Lander County Treasurer*

SPECIFIC REQUEST TO BE PLACED ON THE AGENDA:

Discussion and possible Action regarding surplus sale of June 15, 2011 and other matters properly relating thereto

a. **Results of Sale, June 15, 2011**

b. **Excess items**

c. **Designation of a Surplus Building**

WHAT ACTION WOULD YOU LIKE THE BOARD TO TAKE TO RESOLVE THIS ISSUE?

Discussion/Possible Action/Direction

ARE THERE ANY COSTS ASSOCIATED WITH YOUR REQUEST? **YES** **NO**

AMOUNT:

HAS THIS ISSUE BEEN DISCUSSED AT A PRIOR COMMISSION MEETING? **YES** **NO**

WHEN? **April 2011**

WILL YOU BE PRESENTING WRITTEN INFORMATION AT THE MEETING? **YES** **NO**

HAVE YOU DISCUSSED THIS ISSUE WITH THE AFFECTED DEPT HEAD? **YES** **NO**

FOR REVIEW BY:

CLERK		SHERIFF	xxxx	J.P.	
ASSESSOR		WELFARE		D.A.	xxxx
BUILDING	xxxx	PLANNING		TREASURER	
AIRPORT		RECORDER		SWIM POOL	
R & B	xxxx	OTHER-COMMISSIONERS	xxxx	HOSPITAL	
PUB WORKS	xxxx	GOLF	XXXX	CIVIC CENTER	
FAIR/REC		EXECUTIVE DIRECTOR	xxxx	FINANCE DIRECTOR	xxxx

THE COUNTY EXECUTIVE DIRECTOR RESERVES THE RIGHT TO REJECT OR RECOMMEND TABLING ALL AGENDA REQUESTS FOR INSUFFICIENT INFORMATION.

ALL INFORMATION STATED IS CORRECT AND TRUE TO MY KNOWLEDGE.....

Grace Powrie

MEETING DATE: **June 28, 2011**

#2

JUNE 15, 2011 RESULTS

Item #	description	Amount
1	Golf Cart	425.00
2	Golf Cart	410.00
3	Golf Cart	415.00
4	Golf Cart	410.00
5	93 Ford PU	710.00
6	Riding Lawn Mower	50.00
7	Spray Tank	20.00
8	Generater	31.00
9	Honda Engine	15.00
10	Lawn Edger	50.00
11	Spray Trailer w/Tank	31.00
12	3 sink stainless steel Unit	22.00
13	Commercial Refrigerator	15.00
14	Comercial Stove	10.00
15	Fan	5.00
16	Food Warmer	45.00
17	Ceiling Vent Fan	10.00
18	Commercial Freezer	80.00
19	Misc Tables-wooden	10.00
20	Deep Fryer	10.00
21	Deep Fryer	10.00
22	4 florescent lights	5.00
23	utility table	7.00
24	4 chairs	bmpool
25	Electric Hot Water Heater	6.00
26	Wooden Door	5.00
27	Burner Stove	18.00
28	Trailer w/tank	21.00
29	Hydro pump sprayer on trailer	35.00
30A	Electric Cash Register	10.00
30B	Electric Cash Register	pallet#81
30C	Electric Cash Register	pallet#81
31	Riding Lawn Mower	525.00
32	lawn mower	25.00
33	lawn mower	25.00
34	lawn mower	10.00
35	lawn mower	21.00
36	Spray Trailer	8.00
37	Chair	5.00
38	Chair	5.00
39	Chair	5.00
40	Chair	5.00
41	Chair	5.00
42	Sidewalk Sweeper	25.00
43	file cabinet	15.00
44	file cabinet	15.00
45	file cabinet	15.00
46	file cabinet	15.00
47	Scanner	5.00
48	Clock	5.00
49	Monitor	10.00
50	Monitor	10.00
51	Printer	6.00
52A	adding machine	8.00
52B	adding machine	5.00
53A	adding machine	5.00
53B	adding machine	5.00
54	Desk	10.00
55	Multiple charger	5.00
56	Vacuum	5.00

Item #	description	Amount
57	Ashtray	11.00
58	Binding machine w/combs	15.00
59	transcripting Machines	5.00
60	Hanger Folder Frames	5.00
61	Air Conditioner	5.00
62	Water Dispenser	10.00
63	Shredder	10.00
64	Water Dispenser	10.00
65	binders	8.00
66	binders	bmw/s
67	binders	bmw/s
68A	binders	bmw/s
68B	binders	bmw/s
69	Vacuum	10.00
70	peg board	5.00
71	chalk board	10.00
72	pallet/projectors	17.00
73	pallet/typewritters	6.00
74	fax machines	pallet#80
75	Gas can	5.00
76	mop bucket	5.00
77	asst desk organizers	5.00
78	phone pallet	11.00
79	computer pallet	11.00
80	fax machine pallet	11.00
81	cash register pallet	11.00
82	ambulance 1987 f350XL	taken off
83	Body Armor Vest	destroyed
84	Body Armor Vest	destroyed
85	Body Armor Vest	destroyed
86	Body Armor Vest	destroyed
87	EMT VHS Video/assess.	destroyed
88	EMT Slides	destroyed
88	Slide projector/assess.	15.00
89	baby car seat	destroyed
90	baby car seat	destroyed
91	box of 4 folding chairs	BMVFD
92	box of 4 folding chairs	BMVFD
93	florescent light fixture	8.00
94	locker	21.00
95	locker	21.00
96	locker	21.00
97	locker	21.00
98	vacuum	5.00
99	vacuum	5.00
100	microwave	5.00
101A	copier	6.00
101B	copier	6.00
102A	small refrigerator	18.00
102B	large refrigerator	26.00
103	RCA camcorder	18.00
104	wood storage cabinet	35.00
105	wood storage cabinet	35.00
106	ice maker	25.00
107	copy machine	5.00
108	copy machine	5.00
109A	copy machine	5.00
109B	copy machine	5.00
110	overhead projector	12.00
111	briefcase	5.00

LANDER COUNTY COMMISSION MEETING
June 28, 2011

AGENDA ITEM NO. 3

THE REQUESTED ACTION OF THE LANDER COUNTY COMMISSION IS A:
Discussion regarding letter on one (1) year delinquent taxes per NRS 361.5648 and NRS 361.565 and other matters properly relating thereto.

Public comment.

Background:
Discussion regarding letter on one (1) year delinquent taxes per NRS 361.5648 and NRS 361.565 is brought before the Commission for consideration.

Lander County Treasurer Grace Powrie will present information to the Commission on this item.

Recommended Action:
Treasurer Powrie will make any recommendations for action by the Commission on this item.

AGENDA REQUEST FORM

MEETING DATE: **June 28, 2011**

Name: *Grace Powrie* **Representing:** *Lander County Treasurer*

Address: *315 South Humboldt Street, Battle Mountain, Nevada 89820*

Phone:(H) *775-635-5882* *(w)775-635-5127* **Fax:** *775-635-5593*

WHICH NUMBER SHOULD WE CALL DURING NORMAL BUSINESS HOURS: *WORK*

WHO WILL BE ATTENDING THE MEETING: *Grace Powrie*

JOB TITLE: *Lander County Treasurer*

SPECIFIC REQUEST TO BE PLACED ON THE AGENDA:

Discussion regarding letter on 1 year delinquent taxes per NRS 361.5648 and NRS 361.565 and other matters properly relating thereto:

WHAT ACTION WOULD YOU LIKE THE BOARD TO TAKE TO RESOLVE THIS ISSUE?

Discussion only

ARE THERE ANY COSTS ASSOCIATED WITH YOUR REQUEST? YES (NO)

AMOUNT:

HAS THIS ISSUE BEEN DISCUSSED AT A PRIOR COMMISSION MEETING? YES (NO)

WHEN?

WILL YOU BE PRESENTING WRITTEN INFORMATION AT THE MEETING? (YES) NO

HAVE YOU DISCUSSED THIS ISSUE WITH THE AFFECTED DEPT HEAD? (YES) NO

FOR REVIEW BY:

CLERK		SHERIFF		J.P.	
ASSESSOR		WELFARE		D.A.	
BUILDING		PLANNING		TREASURER	xxxx
AIRPORT		RECORDER		SWIM POOL	
R & B				HOSPITAL	
PUB WORKS		GOLF		CIVIC CENTER	
FAIR/REC		EXECUTIVE DIRECTOR		FINANCE DIRECTOR	

THE COUNTY EXECUTIVE DIRECTOR RESERVES THE RIGHT TO REJECT OR RECOMMEND TABLING ALL AGENDA REQUESTS FOR INSUFFICIENT INFORMATION.

ALL INFORMATION STATED IS CORRECT AND TRUE TO MY KNOWLEDGE.....

Grace Powrie

MEETING DATE: **June 28, 2011**

#3

Lander County Treasurer
GRACE POWRIE

Treasurer
Grace Powrie

Senior Deputy Treasurer
Rebecca Murphy

315 South Humboldt Street
Battle Mountain, Nevada 89820
Phone: (775) 635-5127
Fax: (775) 635-5593

Deputy Treasurer
Darlene Torrence

Deputy Treasurer
Molly Crimmins

June 16, 2011

To: Board of Lander County Commissioners

RE: Issuance of Affidavit and Legal Advertisement of Delinquent Taxpayers

Pursuant to NRS 361.5648, the undersigned does hereby affirm that each taxpayer was given due notice by first-class mail of the delinquency with respect to each parcel. Three Hundred Ninety-Three (393) parcels were delinquent in payment of taxes due for 2010-11. Three Hundred Eighteen (318) envelopes were mailed. Eight (8) envelopes were returned as undeliverable with "no forwarding address" as of May 6, 2011. Twelve (12) notices were within the envelopes determined as undeliverable with "no forwarding address" as of May 6, 2011.

Pursuant to NRS 361.565, the undersigned does hereby acknowledge that One Hundred Ninety-Five (195) parcels were advertised in the Battle Mountain Bugle, as delinquent in payment of taxes due for 2010-11. Each taxpayer so listed was given due notice by first-class mail of the existing delinquency and the total amount to redeem with respect to each parcel. One Hundred Twenty-Five (125) envelopes were mailed. Eight (8) envelopes were returned. Eight envelopes were determined as undeliverable as of June 1, 2011. Twelve (12) notices were within the envelopes determined as undeliverable as of June 1, 2011.

Very truly yours,

Grace Powrie

Grace Powrie
Lander County Treasurer and
Ex-Officio Tax Receiver

LANDER COUNTY COMMISSION MEETING
June 28, 2011

AGENDA ITEM NO. 4

THE REQUESTED ACTION OF THE LANDER COUNTY COMMISSION IS TO:
Discuss and approve/disapprove the following delinquent Water Basin Accounts to be charged back to the State of Nevada: a) 2008-09 Water Basin Accounts; b) 2009-10 Water Basin Accounts; and c) 2010-11 Water Basin Accounts; and other matters properly relating thereto.

Public comment.

Background:
Delinquent Water Basin Accounts to be charged back to the State of Nevada: a) 2008-09 Water Basin Accounts; b) 2009-10 Water Basin Accounts; and c) 2010-11 Water Basin Accounts, are brought before the Commission for consideration.

Lander County Treasurer Grace Powrie will present information to the Commission on this item.

Recommended Action:
Treasurer Powrie will make any recommendations for action by the Commission on this item.

AGENDA REQUEST FORM

MEETING DATE: **June 28, 2011**

Name: *Grace Powrie* **Representing:** *Lander County Treasurer*

Address: *315 South Humboldt Street, Battle Mountain, Nevada 89820*

Phone:(H) *775-635-5882* *(w)775-635-5127* **Fax:** *775-635-5593*

WHICH NUMBER SHOULD WE CALL DURING NORMAL BUSINESS HOURS: *WORK*

WHO WILL BE ATTENDING THE MEETING: *Grace Powrie*

JOB TITLE: *Lander County Treasurer*

SPECIFIC REQUEST TO BE PLACED ON THE AGENDA:

To approve/disapprove Delinquent Water Basin Accounts to be charged back to the State of Nevada and other matters properly relating thereto

a. **2008-09 Water Taxes**
b. **2009-10 Water Taxes**
c. **2010-11 Water Taxes**

WHAT ACTION WOULD YOU LIKE THE BOARD TO TAKE TO RESOLVE THIS ISSUE?
Approve 2008-09, 2009-10, and 2010-11 delinquent Water Basin Accounts to be charged back to the state of Nevada.

ARE THERE ANY COSTS ASSOCIATED WITH YOUR REQUEST? YES (NO)
AMOUNT:

HAS THIS ISSUE BEEN DISCUSSED AT A PRIOR COMMISSION MEETING? YES (NO)
WHEN?

WILL YOU BE PRESENTING WRITTEN INFORMATION AT THE MEETING? (YES) NO

HAVE YOU DISCUSSED THIS ISSUE WITH THE AFFECTED DEPT HEAD? (YES) NO

FOR REVIEW BY:

CLERK		SHERIFF		J.P.			
ASSESSOR	xxxx	WELFARE		D.A.			
BUILDING		PLANNING		TREASURER	xxxx		
AIRPORT		RECORDER		SWIM POOL			
R & B				HOSPITAL			
PUB WORKS		GOLF		CIVIC CENTER			
FAIR/REC		EXECUTIVE DIRECTOR		FINANCE DIRECTOR			

THE COUNTY EXECUTIVE DIRECTOR RESERVES THE RIGHT TO REJECT OR RECOMMEND TABLING ALL AGENDA REQUESTS FOR INSUFFICIENT INFORMATION.

ALL INFORMATION STATED IS CORRECT AND TRUE TO MY KNOWLEDGE.....

Grace Powrie

MEETING DATE: **June 28, 2011**

#4

REAL PROPERTY ADJUSTMENTS

2010/11 ADJUSTMENTS - JANUARY 4, 2011 THROUGH JULY 28, 2011

JUNE 28, 2011

Prepared by the Lander County Treasurer

Name	District	Parcel #	FY	Explanation	Old Tax Amount	New Tax Amount	increase or decrease Adjusted Tax Amount
Reserve Land Management	7	007-030-30	**2010-11**	ag deferred per assessor	281.84	71.84	$ (210.00)
Reserve Land Management	7	007-220-12	**2010-11**	ag deferred per assessor	375.78	96.78	$ (279.00)
					-	-	$ -
Reserve Land IV, LLC	7	007-250-18	**2010-11**	ag deferred per assessor	417.05	109.25	$ (307.80)
Reserve Land IV, LLC	7	007-250-22	**2010-11**	ag deferred per assessor	375.78	100.65	$ (275.13)
Reserve Land IV, LLC	7	007-250-24	**2010-11**	ag deferred per assessor	375.78	100.65	$ (275.13)
Reserve Land IV, LLC	7	007-350-03	**2010-11**	ag deferred per assessor	375.58	100.44	$ (275.14)
Reserve Land IV, LLC	7	007-250-05	**2010-11**	ag deferred per assessor	446.31	117.84	$ (328.47)
						-	$ -
Nevada Land and Resource Co. LLC	8	010-430-36	**2010-11**	transferred to county	246.61	63.61	$ (183.00)
					-	-	$ -
						-	$ -
FMC Corp	7	098-810-16	**2010-11**	water basin tax -reversed back to the state	1.00	-	$ (1.00)
						-	$ -
						-	$ -
						-	$ -
						-	$ -
						-	$ -
					2,895.73	**761.06**	**$ (2,134.67)**

		0
2010-11	$	(2,134.67)
	$	**(2,134.67)**

PERSONAL PROPERTY ADJUSTMENTS

2010/11 ADJUSTMENTS - JULY 1, 2010 THROUGH JUNE 28, 2011

JUNE 28, 2011

Prepared by the Lander County Treasurer

Name	District	MH#/EQ#	FY	Explanation	Old Tax Amount	New Tax Amount	increase or decrease Adjusted Tax Amount
Southwest Co Wireless		EQ#5379	2010-11	error in life schedule	1,897.90	1,166.13	$ (731.77)
					-	-	$ -
					-	-	$ -
Cashman Equipment Rental Co		EQ#5913	2010-11	adj-error in cost of equipment	21,358.33	18,564.82	$ (2,793.51)
					-	-	$ -
					-	-	$ -
ATT mobility		EQ#5968	2010-11	not in county July 1, 2010	3,415.73	-	$ (3,415.73)
					-	-	$ -
					-	-	$ -
Verizon Wireless		EQ#6099	2010-11	error in life schedule	2,801.22	2,551.83	$ (249.39)
					-	-	$ -
					-	-	$ -
Worth, Eldon		MH#727	2010-11	mh destroyed	17.67	-	$ (17.67)
					-	-	$ -
					-	-	$ -
Machado, Heather		MH#806	2010-11	destroyed by fire	89.52	-	$ (89.52)
					-	-	$ -
					-	-	$ -
Silver Stage Salvage		MH#1770	2010-11	mh destroyed	17.61	-	$ (17.61)
					-	-	$ -
					-	-	$ -
Dalluge Lou Ann		MH#2397	2010-11	mh destroyed	21.68	-	$ (21.68)
					-	-	$ -
					-	-	$ -
William Scotsman		MH#3448	2010-11	mh moved out of county	117.94	-	$ (117.94)
					-	-	$ -
					-	-	$ -
					-	-	$ -
					-	-	$ -
						-	$ -
						-	$ -
						-	
					29,737.60	22,282.78	$ (7,454.82)

LANDER COUNTY COMMISSION MEETING
June 28, 2011

AGENDA ITEM NO. 5

THE REQUESTED ACTION OF THE LANDER COUNTY COMMISSION IS TO:
Discuss and approve/disapprove the following adjustments, refunds, to the roll: a) adjustment to the 2009-10 secured roll; b) adjustment to the 2010-11 secured roll and refunds; and c) adjustment to the 2010-11 unsecured roll; and other matters properly relating thereto.

Public comment.

Background:

Adjustments to the Lander County Tax Roll, including refunds of taxes, as follow:
a) adjustment to the 2009-10 secured roll
b) adjustment to the 2010-11 secured roll and refunds
c) adjustment to the 2010-11 unsecured roll
are brought before the Commission for consideration.

Lander County Treasurer Grace Powrie will present information to the Commission on this item.

Recommended Action:

Treasurer Powrie will make any recommendations for action by the Commission on this item.

AGENDA REQUEST FORM

MEETING DATE: June 28, 2011

Name: *Grace Powrie* **Representing:** *Lander County Treasurer*

Address: *315 South Humboldt Street, Battle Mountain, Nevada 89820*

Phone:(H) *775-635-5882* *(w)775-635-5127* **Fax:** *775-635-5593*

WHICH NUMBER SHOULD WE CALL DURING NORMAL BUSINESS HOURS: *WORK*

WHO WILL BE ATTENDING THE MEETING: *Grace Powrie*

JOB TITLE: *Lander County Treasurer*

SPECIFIC REQUEST TO BE PLACED ON THE AGENDA:

To approve/disapprove adjustments to roll and other matters properly relating thereto

a. adjustment to 2009-10 secured roll
b. adjustment to 2010-11 secured roll
c. adjustment to 2010-11 unsecured roll

WHAT ACTION WOULD YOU LIKE THE BOARD TO TAKE TO RESOLVE THIS ISSUE?

a. approve adjustment to 2009-10 secured roll
b. approve adjustment to 2010-11 secured roll
c. approve adjustment to 2010-11 unsecured roll

ARE THERE ANY COSTS ASSOCIATED WITH YOUR REQUEST? YES (NO)
AMOUNT:

HAS THIS ISSUE BEEN DISCUSSED AT A PRIOR COMMISSION MEETING? YES (NO)
WHEN?

WILL YOU BE PRESENTING WRITTEN INFORMATION AT THE MEETING? (YES) NO

HAVE YOU DISCUSSED THIS ISSUE WITH THE AFFECTED DEPT HEAD? (YES) NO

FOR REVIEW BY:

CLERK		SHERIFF		J.P.	
ASSESSOR	xxxx	WELFARE		D.A.	
BUILDING		PLANNING		TREASURER	xxxx
AIRPORT		RECORDER		SWIM POOL	
R & B				HOSPITAL	
PUB WORKS		GOLF		CIVIC CENTER	
FAIR/REC		EXECUTIVE DIRECTOR	xxxx	FINANCE DIRECTOR	

THE COUNTY EXECUTIVE DIRECTOR RESERVES THE RIGHT TO REJECT OR RECOMMEND TABLING ALL AGENDA REQUESTS FOR INSUFFICIENT INFORMATION.

ALL INFORMATION STATED IS CORRECT AND TRUE TO MY KNOWLEDGE.....

Grace Powrie

MEETING DATE: June 28, 2011

#5

LANDER COUNTY, NEVADA

MAKE CHECK PAYABLE TO:

NAME: Lander County Treasurer
ADDRESS: 315 South Humboldt Street
Battle Mountain, Nevada 89820

VOUCHER	DESCRIPTION				AMOUNT	
28-Jun-11	Reimburse 2010-2011 real property taxes on 7 parcels					
	for Reserve Land Management, Inc. per assessor - ag deferred property					
	007-030-30	23.36	050-31010	Austin S/W #2	$	-
	007-220-12	32.16	01-31010	General	$	88.72
	007-250-05	41.07	02-31010	R&B	$	14.74
	007-250-18	37.52	03-31010	Ind	$	2.52
	007-250-22	36.03	05-31010	Ag Ext	$	1.80
	007-250-24	36.03	04-31022	St Ind	$	1.08
	007-350-03	35.85	04-31010	st med ind	$	4.33
		242.02	31-31010	Cap Acq	$	2.16
			43-31010	Pub Safety Debt	$	0.01
			60-31010	Hospital	$	36.85
			11-31010	L C Landfill	$	6.86
			70-31010	School	$	54.10
			71-31010	School Debt	$	-
			90-31010	State	$	12.26
			09-31010	Aging Services	$	6.49
			25-31010	BM Town Spec	$	-
			300-32223	Tech fees-2% assr	$	-
			12-31010	B M Airport	$	2.89
			52-31010	Cult & Rec	$	7.21
			20-31010	Austin Town Spec.		0
					$	242.02

I hereby certify that the above and foregoing claim against Lander County, State of Nevada, is just and reasonable, and that said claim is now due, owing, and unpaid.

By: Grace Powrie
claimant/GRACE POWRIE/LANDER COUNTY TREASURER

I certify that the foregoing is (or attached claims are: correct and just; that same were necessarily contracted for county purposes; that same is now provided for by law and in pursuance to court order.

Signed: _____
Title/District Judge/Clerk of the Court

Rejected: _____
Laid Over: _____
Date approved: _____
Board of County Commissioners: _____

LANDER COUNTY COMMISSION MEETING
June 28, 2011

AGENDA ITEM NO. 6

THE REQUESTED ACTION OF THE LANDER COUNTY COMMISSION IS TO:
Discuss and approve/disapprove the following transfers of delinquent water/sewer accounts to the 2010-11 secured tax roll: a) transfers according to Ordinance No. 2009-13 – Battle Mountain Water and Sewer; and b) transfers according to Ordinance No. 2009-14 – Water and Sewer District #2; and other matters properly relating thereto.

Public comment.

Background:

The following transfers of delinquent water/sewer accounts to the 2010-11 secured tax roll: a) transfers according to Ordinance No. 2009-13 – Battle Mountain Water and Sewer; and b) transfers according to Ordinance No. 2009-14 – Water and Sewer District #2, are brought before the Commission for consideration.

Lander County Treasurer Grace Powrie will present information to the Commission on this item.

Recommended Action:

Treasurer Powrie will make any recommendations for action by the Commission on this item.

AGENDA REQUEST FORM

MEETING DATE: June 28, 2011

Name: *Grace Powrie* **Representing:** *Lander County Treasurer*

Address: *315 South Humboldt Street, Battle Mountain, Nevada 89820*

Phone:(H) *775-635-5882* *(w)775-635-5127* **Fax:** *775-635-5593*

WHICH NUMBER SHOULD WE CALL DURING NORMAL BUSINESS HOURS: *WORK*

WHO WILL BE ATTENDING THE MEETING: *Grace Powrie*

JOB TITLE: *Lander County Treasurer*

SPECIFIC REQUEST TO BE PLACED ON THE AGENDA:

To approve/disapprove the transfer of delinquent water/sewer accounts to the 2010-11 secured tax roll and other matters properly relating thereto

a. **Transfers according to Ordinance #2009-13 - Battle Mountain Water and Sewer**

b. **Transfers according to Ordinance #2009-14 - Water and Sewer District #2**

WHAT ACTION WOULD YOU LIKE THE BOARD TO TAKE TO RESOLVE THIS ISSUE?

a. **Approve transfers to 2010-11 secured tax roll according to Ordinance # 2009-13**

b. **Approve transfers to 2010-11 secured tax roll according to Ordinance # 2009-14**

ARE THERE ANY COSTS ASSOCIATED WITH YOUR REQUEST? YES (NO)

AMOUNT:

HAS THIS ISSUE BEEN DISCUSSED AT A PRIOR COMMISSION MEETING? YES (NO)

WHEN?

WILL YOU BE PRESENTING WRITTEN INFORMATION AT THE MEETING? (YES) NO

HAVE YOU DISCUSSED THIS ISSUE WITH THE AFFECTED DEPT HEAD? (YES) NO

FOR REVIEW BY:

CLERK		SHERIFF		J.P.	
ASSESSOR		WELFARE		D.A.	xxxx
BUILDING		PLANNING		TREASURER	xxxx
AIRPORT		RECORDER		SWIM POOL	
R & B		OTHER- Austin s/w #2	xxxx	HOSPITAL	
PUB WORKS	xxxx	GOLF		CIVIC CENTER	
FAIR/REC		EXECUTIVE DIRECTOR	xxxx	FINANCE DIRECTOR	xxxx

THE COUNTY EXECUTIVE DIRECTOR RESERVES THE RIGHT TO REJECT OR RECOMMEND TABLING ALL AGENDA REQUESTS FOR INSUFFICIENT INFORMATION.

ALL INFORMATION STATED IS CORRECT AND TRUE TO MY KNOWLEDGE..... Grace Powrie

MEETING DATE: June 28, 2011

#6

JUNE 28, 2011

BATTLE MOUNTAIN WATER AND SEWER DELINQUENT ACCOUNTS TO BE TRANSFERRED TO THE 2010-2011 REAL PROPERTY TAX ROLL

ACCOUNTS 90 DAYS OR OLDER AS OF JUNE 23, 2011

36 Accounts	Grand Total	$19,930.05

Parcel #	Legal Description	Service Address	Name	W/S Acct #	Amount of Lien
002-180-52	Lot 37 BME	605 Walnut Court	Lucas, James G. & Kim Delee	010-1070-0-2	543.09
002-180-36	Lot 21 BME	625 Maple Court	Syme, Terry	010-1165-0-1	252.54
002-180-19	Lot 4 BME	635 Birch Court	Engelson, Jerry and Dianne	010-1255-0-0	679.06
002-181-06	Par 2 D-3 Sullivan Par Map	410 E. 3rd Street	Pruett, Jeremy D & Tara	010-1322-0-6	906.43
002-106-06	Lot 15 + Block A Scotts Addition	235 E. Second Street	Boyer, Lou & Inez	010-1370-0-3	2,536.17
002-077-06	Lots 20, 21, & E 10' Lot 19 Block K	33 W 3rd Street	Cruz Jr., Santiago	010-1695-0-1	271.27
002-162-12	E2 Lots 13 & 14 Block 4 -aka 5	475 - T Good Street	Vega, Juan & Florence	010-2345-0-4	400.78
002-162-11	W 1/2 Lot 13 & 14 Block 4 -aka	475 E 5th Street	Mendez, Gonzalo & Deborah K.	010-2355-0-3	400.78
002-171-08	Lot 70 GCS	998 Gold Creek	Brewer, Alan D.	010-2635-0-1	481.11
002-172-09	Lot 22 GCS	692 E. Wilson Avenue	Erickson, Terry L. & Angel L.	010-2870-0-4	456.73
002-161-04	Lot 8 Block 3 EPA	710 Altenburg Avenue	Lander County Treasurer (Youngblood)	010-3045-0-1	896.74
002-116-06	Lots 18-20 Blk U SABM	147E. Sixth Street	Dennis, Samuel C.	010-3255-0-3	184.54
002-092-02	Lot 25 - 27 Blk I BM	850 N. 2nd Street	Glenn, Janet L.	020-1370-0-4	215.73
002-064-10	Lots 5 & 6 Blk 4 BM	567 N. First Street	Rodabough Family Trust	020-1485-0-5	570.72
002-064-06	Lots 7-10 Block 4 BM	545 N. First Street	Rodabough, Kelly	020-1490-0-0	500.88
002-052-06	Lot 1+ Block 7 B M , Units 1-10	296 North Second Street A	Acor, Tom and Imogean	020-1600-0-1	672.19
002-251-06	Lot 6 Block A BRS2	680 Brent Drive	Hamilton, Lyle & Clara	030-1295-0-6	1,038.27
002-411-23	Lot 23 Block A SCE	201 E Antelope Drive	Hartzell, Robert & Linda	030-1650-0-1	643.71
002-412-06	Lot 6 Block B SCE	418 W. Antelope Drive	Russel, Trina L.	030-1775-0-3	445.98
002-412-04	Lot 4 Block B SCE	422 W. Antelope Drive	Zerr, Leland C.	030-1795-0-0	521.51
002-394-03	Lot 3 Block D BRS5	203 Middlegate Drive	Linville, George A. & Veretta K.	030-2060-0-1	185.74
002-393-08	Lot 8 Block C BRS5	305 Eastgate Drive	Miller, Neil L. & Tracey M.	030-2110-0-0	826.74
002-392-10	Lot10 Block B Broyles Ranch Unit #5	502 Northgate Drive	Torrence, K and Larabee, Stanley	030-2175-0-8	402.92
002-381-18	Lot 18 Blk A BRS 4	689 Broyles Ranch Road	Diaz, Julio A	030-2405-0-3	290.17
002-407-05	Lot 5 Block G Lemaire MH Estates Unit #2	318 Carson Road	Osorio, Trinidad P. & Rosa	040-1190-0-0	685.34
002-407-09	Lot 9 Block G LME2	306 Carson Road	Baniki, Eugene F. Jr.	040-1230-0-2	269.64
002-407-12	Lot 12 Blk G LME2	300 Carson Road	Dorado, Andres & Torres M.	040-1265-0-1	231.98
002-421-19	Par 3 B Miller Ent/Sweeney	80 Eighteenth Street	Scherer, Ryan G	040-1447-0-0	314.64
002-423-02	Lot 2 Blk C LME3	203 Lupin Drive	Boltz, Eric J.	040-1470-0-1	261.47
002-423-04	Lot 4 Block C Lemaire MH Estates Unit #3	207 Lupin Drive	Lander County Treasurer (Douglas)	040-1480-0-2	982.17
002-429-11	Lot 11 Blk H LME3	108 Sixteenth Street	Fimbres, Israel & Thelma B.	040-1585-0-0	197.15
002-425-02	Lot 2 Blk E LME 3	103 Congress Avenue	Gonzales, Manuel & Martinez J	040-1935-0-1	826.74
002-435-06	Lot 6 Blk P LME3	210 Bastian Road	Youngblood, Glenn J. & Quada	040-2490-0-0	252.34
002-436-07	Lot Q Block 7 Lemaire Estates Unit #3	312 Bastian Road	Jennerjohn, Richard W. & Theresa	040-2555-0-9	347.46
002-330-24	Par A Barens Map # 197514	998 West Humboldt Street	Berens, Terence A Jr & Harry S	040-2579-0-0	329.14
002-342-05	Lot 5 Block A LME Unit #1	370 Lemaire Road	Payne, Joe B. Jr. & Susan	040-2645-0-0	908.18
Total					**19,930.05**

June 28, 2010

AUSTIN COMBINED SEWER AND WATER GENERAL IMPROVEMENT DISTRTICT #2 DELINQUENT ACCOUNTS TO BE TRANSFERRED TO THE 2010-2011 REAL PROPERTY TAX ROLL

ACCOUNTS 90 DAYS OR OLDER AS OF JUNE 23, 2011

2 Accounts	Grand Total	$374.52

Parcel #	Legal Description	Service Address	Name	W/S Acct #	Amount of Lien
001-216-04	S/R Lots 9-12 Blk 45 AN	211 Water Street	Lander County Treasurer (Passmore)	63	167.62
001-067-02	Lots 6-9 Block 5 AN	57 Paul Street	Lander County Treasurer (Bleazard)	111	206.90
					-
Total					**374.52**

LANDER COUNTY COMMISSION MEETING
June 28, 2011

AGENDA ITEM NO. 7

THE REQUESTED ACTION OF THE LANDER COUNTY COMMISSION IS TO:
Discuss and approve/disapprove payment for delinquent water and sewer accounts for 2010-11: a) to pay accounts according to Ordinance No. 2009-13 – Battle Mountain; and b) to pay accounts according to Ordinance No. 2009-14 – Austin Water and Sewer #2; and other matters properly relating thereto.

Public comment.

Background:
Payment for delinquent water and sewer accounts for 2010-11: a) to pay accounts according to Ordinance No. 2009-13 – Battle Mountain; and, b) to pay accounts according to Ordinance No. 2009-14 – Austin Water and Sewer #2, is brought before the Commission for consideration.

Lander County Treasurer Grace Powrie will present information to the Commission on this item.

Recommended Action:
Treasurer Powrie will make any recommendations for action by the Commission on this item.

AGENDA REQUEST FORM

MEETING DATE: June 28, 2011

Name: *Grace Powrie* **Representing:** *Lander County Treasurer*

Address: *315 South Humboldt Street, Battle Mountain, Nevada 89820*

Phone:(H) *775-635-5882* *(w)775-635-5127* **Fax:** *775-635-5593*

WHICH NUMBER SHOULD WE CALL DURING NORMAL BUSINESS HOURS: *WORK*

WHO WILL BE ATTENDING THE MEETING: *Grace Powrie*

JOB TITLE: *Lander County Treasurer*

SPECIFIC REQUEST TO BE PLACED ON THE AGENDA:

To approve/disapprove payment for delinquent water and sewer accounts for 2010-11 and other matters properly relating thereto

a. **To pay accounts according to ordinance # 2009-13-Battle Mountain**

b. **To pay accounts according to ordinance # 2009-14-Austin Water and Sewer #2**

WHAT ACTION WOULD YOU LIKE THE BOARD TO TAKE TO RESOLVE THIS ISSUE?

a. **Approve payment to Battle Mountain Water and Sewer for delinquent accounts 90 days or older per Ordinance # 2009-13**

b. **Approve payment to Austin Water and Sewer District #2 for delinquent accounts 90 days or older per Ordinance # 2009-14**

ARE THERE ANY COSTS ASSOCIATED WITH YOUR REQUEST? YES (NO)

AMOUNT:

HAS THIS ISSUE BEEN DISCUSSED AT A PRIOR COMMISSION MEETING? YES (NO)

WHEN?

WILL YOU BE PRESENTING WRITTEN INFORMATION AT THE MEETING? (YES) NO

HAVE YOU DISCUSSED THIS ISSUE WITH THE AFFECTED DEPT HEAD? (YES) NO

FOR REVIEW BY:

CLERK		SHERIFF			J.P.		
ASSESSOR		WELFARE			D.A.		xxxx
BUILDING		PLANNING			TREASURER		xxxx
AIRPORT		RECORDER			SWIM POOL		
R & B		OTHER-Austin W/S #2		xxxx	HOSPITAL		
PUB WORKS	xxxx	GOLF			CIVIC CENTER		
FAIR/REC		EXECUTIVE DIRECTOR		xxxx	FINANCE DIRECTOR		xxxx

THE COUNTY EXECUTIVE DIRECTOR RESERVES THE RIGHT TO REJECT OR RECOMMEND TABLING ALL AGENDA REQUESTS FOR INSUFFICIENT INFORMATION.

ALL INFORMATION STATED IS CORRECT AND TRUE TO MY KNOWLEDGE.....

Grace Powrie

MEETING DATE: June 28, 2011

#7

LANDER COUNTY, NEVADA

MAKE CHECK PAYABLE TO

NAME: Battle Mountain Water and Sewer
ADDRESS:
315 South Humboldt Street
Battle Mountain, Nevada 89820

VOUCHER	DESCRIPTION			AMOUNT
6/28/2011	36 Battle Mountain delinquent			
	Water and Sewer Accounts TO PAY IN FULL AND			
	transfer to 2010-11 Real Property Tax Roll			
	Service Address	Name	W/S Acct #	Amount of Lien
	605 Walnut Court	Lucas, James G. & Kim Delee	010-1070-0-2	543.09
	625 Maple Court	Syme, Terry	010-1165-0-1	252.54
	635 Birch Court	Engelson, Jerry and Dianne	010-1255-0-0	679.06
	410 E. 3rd Street	Pruett, Jeremy D & Tara	010-1322-0-6	906.43
	235 E. Second Street	Boyer, Lou & Inez	010-1370-0-3	2,536.17
	33 W 3rd Street	Cruz, Santiago	010-1695-0-1	271.27
	475 - T Good Street	Vega, Juan & Florence	010-2345-0-4	400.78
	475 E 5th Street	Mendez, Gonzalo & Deborah K.	010-2355-0-3	400.78
	998 Gold Creek	Brewer, Alan D.	010-2635-0-1	481.11
	692 E. Wilson Avenue	Erickson, Terry L. & Angel L.	010-2870-0-4	456.73
	710 Altenburg Avenue	Lander County Treasurer (Youngblood)	010-3045-0-1	896.74
	147E. Sixth Street	Dennis, Samuel C.	010-3255-0-3	184.54
	850 N. 2nd Street	Glenn, Janet L.	020-1370-0-4	215.73
	567 N. First Street	Rodabough Family Trust	020-1485-0-5	570.72
	545 N. First Street	Rodabough, Kelly	020-1490-0-0	500.88
	296 North Second Street A	Acor, Tom and Imogean	020-1600-0-1	672.19
	680 Brent Drive	Hamilton, Lyle & Clara	030-1295-0-6	1,038.27
	201 E Antelope Drive	Hartzell, Robert & Linda	030-1650-0-1	643.71
	418 W. Antelope Drive	Russel, Trina L.	030-1775-0-3	445.98
	422 W. Antelope Drive	Zerr, Leland C.	030-1795-0-0	521.51
	203 Middlegate	Linville, George & Veretta	030-2060-0-1	185.74
	305 Eastgate Drive	Miller, Neil L. & Tracey M.	030-2110-0-0	826.74
	502 Northgate Drive	Torrence, K and Larabee, Stanley	030-2175-0-8	402.92
	689 Broyles Ranch Road	Diaz, Julio A	030-2405-0-3	290.17
	318 Carson Road	Osorio, Trinidad P. & Rosa	040-1190-0-0	685.34
	306 Carson Road	Baniki, Eugene F. Jr.	040-1230-0-2	269.64
	300 Carson Road	Dorado, Andres & Torres M.	040-1265-0-1	231.98
	80 Eighteenth Street	Scherer, Ryan G	040-1447-0-0	314.64
	203 Lupin Drive	Boltz, Eric	040-1470-0-1	261.47
	207 Lupin Drive	Lander County Treasurer (Douglas)	040-1480-0-2	982.17
	108 Sixteenth Street	Fimbres, Israel & Thelma B.	040-1585-0-0	197.15
	103 Congress Avenue	Gonzales, Manuel & Martinez J	040-1935-0-1	826.74
	210 Bastian Road	Youngblood, Glenn J. & Quada	040-2490-0-0	252.34
	312 Bastian Road	Jennerjohn, Richard W. & Theresa	040-2555-0-9	347.46
	998 West Humboldt Street	Berens, Terence A Jr & Harry S	040-2579-0-0	329.14
	370 Lemaire Road	Payne, Joe B. Jr. & Susan	040-2645-0-0	908.18
	001-31200	**General**		**19,930.05**
TOTAL				**19,930.05**

I hereby certify that the above and foregoing claim against Lander County, State of Nevada, is just and reasonable, and that said claim is now due, owing and unpaid.

By: Grace Towne
claimant/Lander County Treasurer

I certify that the foregoing is (or attached claims are) correct and just; that same were necessarily contracted for county purposes; that same is now provided for by law and in pursuance to court order.

Signed: _____
Title/ District Judge/Clerk of the Court

Rejected: _____
Laid Over: _____
Date approved: _____
Board of County Commissioners: Ben Burlock
David R Mason

MAKE CHECK PAYABLE TO

NAME: Austin Combined Sewer and Water District #2
ADDRESS: P. O. Box 144

Austin, Nevada 89310

VOUCHER	DESCRIPTION			AMOUNT
6/28/2011	2 Austin delinquent			
	Water and Sewer Accounts TO PAY IN FULL AND			
	transfer to 2010-11 Real Property Tax Roll			
	Service Address	Name	W/S Acct #	Amount of Lien
	211 Water Street	Lander County Treasurer (Passmore)	63	167.62
	57 Paul Street	Lander County Treasurer (Bleazard)	111	206.90
				-
	001-31200	**General**		**374.52**
TOTAL				**374.52**

I hereby certify that the above and foregoing claim against Lander County, State of Nevada, is just and reasonable, and that said claim is now due, owing and unpaid.

By: Grace Powers
claimant/Lander County Treasurer

I certify that the foregoing is (or attached claims are) correct and just; that same were necessarily contracted for county purposes; that same is now provided for by law and in pursuance to court order.

Signed: _____
Title/ District Judge/Clerk of the Court

Rejected: _____
Laid Over: _____
Date approved: _____
Board of County Commissioners: _____

Dean Bullock
David R Mason

LANDER COUNTY COMMISSION MEETING
June 28, 2011

AGENDA ITEM NO. 8

THE REQUESTED ACTION OF THE LANDER COUNTY COMMISSION IS A:
Discussion and possible action regarding the proper use of the County Federal Tax ID# and other matters properly relating thereto.

Public comment.

Background:

Discussion regarding the proper use of the County Federal Tax ID# is brought before the Commission for consideration.

The Lander County Federal Tax Identification Number, or "88" number, is a public record. The number while, apparently, subject to instances of misuse is not classified or restricted information. The Federal Tax ID# is an essential piece of information for many routine tasks such as: completion of grant applications; providing vendors evidence of the County's exemption from payment of sales and use taxes; providing donors of property evidence of the County's status as a governmental entity; providing state and federal agencies data to facilitate funds transfers for grant reimbursements and other cash transactions, etc.

It is also important to note that there are three "essential" numbers central to the financial business of the County from an external or 'interaction' perspective. These numbers are: the Federal Tax Identification ("88") Number, the DUNS Number and the Central Contractor Registry (CCR) Number. The Federal Tax Identification Number and the DUNS Number are public information and have limited, if any, restriction on dissemination. The Central Contractor Registry (CCR) Number, however, is a highly restricted piece of information maintained by the Treasurer and is regarded as such per County policy and protocol.

Lander County Treasurer Grace Powrie will present more detailed information to the Commission on this item.

Recommended Action:

Treasurer Powrie will make any recommendations for action by the Commission on this item.

AGENDA REQUEST FORM

MEETING DATE: June 28, 2011

Name: *Grace Powrie* **Representing:** *Lander County Treasurer*

Address: *315 South Humboldt Street, Battle Mountain, Nevada 89820*

Phone:(H) *775-635-5882* *(w)775-635-5127* **Fax:** *775-635-5593*

WHICH NUMBER SHOULD WE CALL DURING NORMAL BUSINESS HOURS: *WORK*

WHO WILL BE ATTENDING THE MEETING: *Grace Powrie*

JOB TITLE: *Lander County Treasurer*

SPECIFIC REQUEST TO BE PLACED ON THE AGENDA:

Discussion and possible action concerning th proper use of the County Federal Tax ID# and other matters properly relating thereto

WHAT ACTION WOULD YOU LIKE THE BOARD TO TAKE TO RESOLVE THIS ISSUE?

Acknowledge and approve the proper use of County Federal Tax ID#. through the Lander County Treasurer's Office

ARE THERE ANY COSTS ASSOCIATED WITH YOUR REQUEST? YES (NO)
AMOUNT:

HAS THIS ISSUE BEEN DISCUSSED AT A PRIOR COMMISSION MEETING? YES (NO)
WHEN?

WILL YOU BE PRESENTING WRITTEN INFORMATION AT THE MEETING? YES (NO)

HAVE YOU DISCUSSED THIS ISSUE WITH THE AFFECTED DEPT HEAD? (YES) NO

FOR REVIEW BY:

CLERK		SHERIFF			J.P.		
ASSESSOR		WELFARE			D.A.		
BUILDING		PLANNING			TREASURER		xxxx
AIRPORT		RECORDER			SWIM POOL		
R & B					HOSPITAL		
PUB WORKS		GOLF			CIVIC CENTER		
FAIR/REC		EXECUTIVE DIRECTOR			FINANCE DIRECTOR		xxxx

THE COUNTY EXECUTIVE DIRECTOR RESERVES THE RIGHT TO REJECT OR RECOMMEND TABLING ALL AGENDA REQUESTS FOR INSUFFICIENT INFORMATION.

ALL INFORMATION STATED IS CORRECT AND TRUE TO MY KNOWLEDGE.....

Grace Powrie

MEETING DATE: June 28, 2011

#8

LANDER COUNTY COMMISSION MEETING
June 28, 2011

AGENDA ITEM NO. 9

THE REQUESTED ACTION OF THE LANDER COUNTY COMMISSION IS TO:
Discuss and approve/disapprove the following payments for 2011 Estimated Net Proceeds received in June 2011: a) the Lander County School District; and b) the Lander County Hospital District; and other matters properly relating thereto.

Public comment.

Background:

The following payments for 2011 Estimated Net Proceeds, received in June, are presented for Commission consideration: a) the Lander County School District; and b) the Lander County Hospital District.

Lander County Treasurer Grace Powrie will present information to the Commission on this item.

Recommended Action:

Treasurer Powrie will make any recommendations for action by the Commission on this item.

AGENDA REQUEST FORM

MEETING DATE: June 28, 2011

Name: *Grace Powrie* **Representing:** *Lander County Treasurer*

Address: *315 South Humboldt Street, Battle Mountain, Nevada 89820*

Phone:(H) *775-635-5882* *(w)775-635-5127* **Fax:** *775-635-5593*

WHICH NUMBER SHOULD WE CALL DURING NORMAL BUSINESS HOURS: *WORK*

WHO WILL BE ATTENDING THE MEETING: *Grace Powrie*

JOB TITLE: *Lander County Treasurer*

SPECIFIC REQUEST TO BE PLACED ON THE AGENDA:

To approve/disapprove payment for 2011 Estimated Net Proceeds received in June 2011 and other matters properly relating thereto

a. To pay the Lander County School District

b. To pay the Lander County Hospital

WHAT ACTION WOULD YOU LIKE THE BOARD TO TAKE TO RESOLVE THIS ISSUE?

a. Approve payment for the 2011 Estimated net proceeds to the Lander County School District for monies received in June 2011

b. Approve payment for the 2011 Estimated net proceeds to the Lander County Hospital District for monies received in June 2011

ARE THERE ANY COSTS ASSOCIATED WITH YOUR REQUEST? **YES** **NO**

AMOUNT:

HAS THIS ISSUE BEEN DISCUSSED AT A PRIOR COMMISSION MEETING? **YES** **NO**

WHEN?

WILL YOU BE PRESENTING WRITTEN INFORMATION AT THE MEETING? **YES** **NO**

HAVE YOU DISCUSSED THIS ISSUE WITH THE AFFECTED DEPT HEAD? **YES** **NO**

FOR REVIEW BY:

CLERK		SHERIFF		J.P.	
ASSESSOR		WELFARE		D.A.	
BUILDING		PLANNING		TREASURER	xxxx
AIRPORT		RECORDER		SWIM POOL	
R & B		OTHER-Austin W/S #2		HOSPITAL	xxxx
PUB WORKS		GOLF		SCHOOL	xxxx
FAIR/REC		EXECUTIVE DIRECTOR	xxxx	FINANCE DIRECTOR	

THE COUNTY EXECUTIVE DIRECTOR RESERVES THE RIGHT TO REJECT OR RECOMMEND TABLING ALL AGENDA REQUESTS FOR INSUFFICIENT INFORMATION.

ALL INFORMATION STATED IS CORRECT AND TRUE TO MY KNOWLEDGE.....

Grace Powrie

MEETING DATE: June 28, 2011

#9

LANDER COUNTY, NEVADA

MAKE CHECK PAYABLE TO

NAME: Lander County School District
ADDRESS: P. O. Box 1300
Battle Mountain, Nevada 89820

VOUCHER	DESCRIPTION		AMOUNT
6/28/2011	Net Proceeds for Estimated 2011		
	070- 59045	**School**	**$12,269,060.12**
	TOTAL		**$12,269,060.12**

I hereby certify that the above and foregoing claim against Lander County, State of Nevada, is just and reasonable, and that said claim is now due, owing and unpaid.

By: Grace Powers
claimant/Lander County Treasurer

I certify that the foregoing is (or attached claims are) correct and just; that same were necessarily contracted for county purposes; that same is now provided for by law and in pursuance to court order.

Signed: _____
Title/ District Judge/Clerk of the Court

Rejected: _____
Laid Over: _____
Date approved: _____
Board of County Commissioners: [signature] [signature] David R. Mason

LANDER COUNTY, NEVADA

MAKE CHECK PAYABLE TO

NAME: Battle Mountain General Hospital
ADDRESS: 535 South Humboldt
Battle Mountain, Nevada 89820

VOUCHER	DESCRIPTION		AMOUNT
6/28/2011	Net Proceeds for Estimated 2011		
	060- 59045	**Hospital**	**$8,357,683.75**
	TOTAL		**$8,357,683.75**

I hereby certify that the above and foregoing claim against Lander County, State of Nevada, is just and reasonable, and that said claim is now due, owing and unpaid.

By: Grace Powers
claimant/Lander County Treasurer

I certify that the foregoing is (or attached claims are) correct and just; that same were necessarily contracted for county purposes; that same is now provided for by law and in pursuance to court order.

Signed: _____
Title/ District Judge/Clerk of the Court

Rejected: _____
Laid Over: _____
Date approved: _____
Board of County Commissioners: [signature] Dean Bullock David R. Mason

LANDER COUNTY COMMISSION MEETING
June 28, 2011

AGENDA ITEM NO. 10

THE REQUESTED ACTION OF THE LANDER COUNTY COMMISSION IS A:
Discussion and possible action regarding supplemental funding beginning July 1, 2011 for TRIDENT Task Force position in the Lander County Sheriff's Office and other matters properly relating thereto.

Public comment.

Background:

Supplemental funding, beginning July 1, 2011, for the TRIDENT Task Force position in the Lander County Sheriff's Office is brought before the Commission for consideration.

Lander County Undersheriff Robert Quick will present information to the Commission on this item.

Recommended Action:

Undersheriff Quick will make a recommendation for action by the Commission on this item.

LANDER COUNTY COMMISSION MEETING
June 28, 2011

AGENDA ITEM NO. 10

THE REQUESTED ACTION OF THE LANDER COUNTY COMMISSION IS A:
Discussion and possible action regarding supplemental funding beginning July 1, 2011 for TRIDENT Task Force position in the Lander County Sheriff's Office and other matters properly relating thereto.

Public comment.

Background:

Supplemental funding, beginning July 1, 2011, for the TRIDENT Task Force position in the Lander County Sheriff's Office is brought before the Commission for consideration.

Lander County Undersheriff Robert Quick will present information to the Commission on this item.

Recommended Action:

Undersheriff Quick will make a recommendation for action by the Commission on this item.

AGENDA REQUEST FORM

COMMISSIONER MEETING DATE: June 28, 2011

NAME: Robert Quick REPRESENTING: Lander County Sheriff's Office

ADDRESS: 2 State Route 305, Battle Mountain, Nevada 89820

PHONE (H): 775-635-1100 (W): 775-635-1100 (FAX): 775-635-2577

WHICH NUMBER SHOULD WE CALL DURING NORMAL BUSINESS HOURS: 775-635-1100

WHO WILL BE ATTENDING THE MEETING: Sheriff / Self

JOB TITLE: Undersheriff

SPECIFIC REQUEST TO BE PLACED ON THE AGENDA:
Discussion and possible action regarding supplemental funding beginning July 1, 2011 for TRIDENT Task Force position in the Lander County Sheriff's Office and other matters related thereto.

WHAT ACTION WOULD YOU LIKE THE BOARD TO TAKE TO RESOLVE THIS ISSUE?
Allocate supplemental funding

ARE THERE ANY COSTS ASSOCIATED WITH YOUR REQUEST: ☒ YES ☐ NO
AMOUNT: Pending

HAS THIS ISSUE BEEN DISCUSSED AT A PRIOR COMMISSION MEETING? ☐ YES ☒ NO
WHEN? _____

WILL YOU BE PRESENTING WRITTEN INFORMATION AT THE MEETING? ☒ YES ☐ NO

HAVE YOU DISCUSSED THIS ISSUE WITH THE AFFECTED DEPT HEAD?: ☒ YES ☐ NO

FOR REVIEW BY:

AIRPORT _____	DIST. ATTY. _____	SENIOR CTR. _____
AMBULANCE _____	EXE. DIR. _____	SHERIFF _____
ARGENTA J.P. _____	FIRE _____	SOCIAL SVC. _____
ASSESSOR _____	GOLF _____	TREASURER _____
AUSTIN J.P. _____	PUBLIC WORKS _____	W & S _____
CLERK _____	RECORDER _____	OTHER _____
COMM. DEVT. _____		

THE EXECUTIVE DIRECTOR RESERVES THE RIGHT TO REJECT OR RECOMMEND TABLING ALL AGENDA REQUESTS FOR INSUFFICIENT INFORMATION.

ALL INFORMATION STATED IS CORRECT AND TRUE TO MY KNOWLEDGE.....

Signature Field Robert W. Quick Digitally signed by Robert W. Quick DN: cn=Robert W. Quick, o=Lander County Sheriff's Office, ou=Undersheriff, email=rquick@landercso.org, c=US Date: 2011.06.20 08:36:13 -07'00'

DATE: 06/20/2011

BOARD MEETS THE 2ND AND 4TH THURSDAY OF EACH MONTH
COMMISSION FAX (775) 635-5332

10

LANDER COUNTY COMMISSION MEETING
June 28, 2011

AGENDA ITEM NO. 11

THE REQUESTED ACTION OF THE LANDER COUNTY COMMISSION IS A:
Discussion and possible action regarding revised Intrastate Interlocal Contract between Lander County Sheriff and the State of Nevada Department of Information Technology for rack rental space in the Austin Summit DoIT site and other matters properly relating thereto.

Public comment.

Background:
A revised Intrastate Interlocal Contract between Lander County Sheriff and the State of Nevada Department of Information Technology for rack rental space in the Austin Summit DoIT site is brought before the Commission for consideration.

Lander County Undersheriff Robert Quick will present information regarding the revised Interlocal Contract to the Commission.

Recommended Action:
Undersheriff Quick will make a recommendation for action by the Commission on this item.

AGENDA REQUEST FORM

COMMISSIONER MEETING DATE: June 28, 2011

NAME: Robert W. Quick REPRESENTING: Lander County Sheriff's Office

ADDRESS: 2 State Route 305, Battle Mountain, Nevada 89820

PHONE (H): 775-635-1100 (W): 775-635-1100 (FAX): 775-635-2577

WHICH NUMBER SHOULD WE CALL DURING NORMAL BUSINESS HOURS: 775-635-1100

WHO WILL BE ATTENDING THE MEETING: Self

JOB TITLE: Undersheriff

SPECIFIC REQUEST TO BE PLACED ON THE AGENDA:
Discussion and possible actions regarding the revised Intrastate Interlocal Contract between Lander County Sheriff and the State of Nevada Department of Information Technology for rack rental space in the Austin Summit DoIT site.

This is a corrected contract that was already approved on June 9, 2011

WHAT ACTION WOULD YOU LIKE THE BOARD TO TAKE TO RESOLVE THIS ISSUE?
Approval

ARE THERE ANY COSTS ASSOCIATED WITH YOUR REQUEST: ☒ YES ☐ NO
AMOUNT: Budgetted

HAS THIS ISSUE BEEN DISCUSSED AT A PRIOR COMMISSION MEETING? ☒ YES ☐ NO
WHEN? June 9, 2011

WILL YOU BE PRESENTING WRITTEN INFORMATION AT THE MEETING? ☒ YES ☐ NO

HAVE YOU DISCUSSED THIS ISSUE WITH THE AFFECTED DEPT HEAD?: ☒ YES ☐ NO

FOR REVIEW BY:

AIRPORT		DIST. ATTY.		SENIOR CTR.	
AMBULANCE		EXE. DIR.		SHERIFF	
ARGENTA J.P.		FIRE		SOCIAL SVC.	
ASSESSOR		GOLF		TREASURER	
AUSTIN J.P.		PUBLIC WORKS		W & S	
CLERK		RECORDER		OTHER	
COMM. DEVT.					

THE EXECUTIVE DIRECTOR RESERVES THE RIGHT TO REJECT OR RECOMMEND TABLING ALL AGENDA REQUESTS FOR INSUFFICIENT INFORMATION.

ALL INFORMATION STATED IS CORRECT AND TRUE TO MY KNOWLEDGE.....

Signature Field Robert W. Quick Digitally signed by Robert W. Quick DN: cn=Robert W. Quick, o=Lander County Sheriff's Office, ou=Undersheriff, email=rquick@landercounty.com, c=US Date: 2011.06.21 08:04:08 -07'00'

DATE: 06/21/2011

BOARD MEETS THE 2ND AND 4TH THURSDAY OF EACH MONTH
COMMISSION FAX (775) 635-5332

11

Robert W. Quick

From: Bennett Bohm <bnbohm@doit.nv.gov>
Sent: Wednesday, June 15, 2011 7:39 AM
To: 'Robert W. Quick'
Cc: Pat Sheehan
Subject: RE: Lander Co. Sheriff's office (Austin Mt.) agreement amendment
Attachments: Intrastate Interlocal Contract.docx

Robert:

Please go ahead and resubmit three contract packages as you did before, but this time (since Attachment B is already signed) you will need to acquire three approval signatures on the Intrastate Interlocal agreement only. I will return the three (3) Attachment A's and B's to you once I receive them in the mail for you to resubmit with the new contract form. The start date will remain July 1, 2011 and I will submit it for approvals through the BOE with a retro letter to ensure no loss in status for Lander County. I have reattached the correct Contract form for you to submit.

Thanks again for your patience with the processes,

Ben Bohm | Management Analyst III | Network Engineering
State of Nevada | Department of Information Technology
T: (775) 684-5859 | F: (775) 684-4324 | E: bnbohm@doit.nv.gov

This communication, including any attachments, may contain confidential information and is intended only for the individual or entity to which it is addressed. Any review, dissemination or copying of this communication by anyone other than the intended recipient is strictly prohibited. If you are not the intended recipient, please contact the sender by reply e-Mail and delete all copies of the original message.

From: Robert W. Quick [mailto:rquick@landerso.org]
Sent: Tuesday, June 14, 2011 5:12 PM
To: Bennett Bohm
Subject: RE: Lander Co. Sheriff's office (Austin Mt.) agreement amendment

Well, I just got the contract signed on June 9th and mailed it on the 13th. What do you want to do? I cannot substitute. I will have to run it through the Commission and District Attorney again.

Just FYI, I also got the building on Austin Summit approved and am in the process of applying with the US Forestry for permitting. In that case

Robert W. Quick
Undersheriff
Lander County Sheriff's Office
Physical: 2 State Route 305
Mailing: Post Office Box 1625

Battle Mountain, Nevada 89820
(775) 635-1100, 230
(775) 635-2577 (fax)

This message w/attachments (message) is intended solely for the use of the intended recipient(s) and may contain information that is privileged, confidential or proprietary. If you are not an intended recipient, please notify the sender, and then please delete and destroy all copies and attachments, and be advised that any review or dissemination of, or the taking of any action in reliance on, the information contained in or attached to this message is prohibited.

Sender may intercept, monitor, review and retain e-communications (EC) traveling through its networks/systems and may produce any such EC to regulators, law enforcement, in litigation and as required by law.

From: Bennett Bohm [mailto:bnbohm@doit.nv.gov]
Sent: Tuesday, June 14, 2011 2:23 PM
To: 'Robert Quick'
Cc: Pat Sheehan
Subject: RE: Lander Co. Sheriff's office (Austin Mt.) agreement amendment

Hi Robert....I have one more issue that needs fixing before we can move forward with the agreement between DoIT and Lander County Sheriff's Office. Since I have not seen your approved agreement back yet you can just substitute the attached 'Intrastate' Interlocal agreement for the one I sent previously. It would seem my template is copied from a Federal Interlocal and the language does not have anything to do with our two entities as far as renting rack space is concerned. Please print out three copies and apply them to Attachments A + B for acquiring signature authority from the Lander County Sheriff's Office.

I have attached the new agreement and also the old one and highlighted what has changed in the old one. The new one is named Intrastate Interlocal Contract and the old one is just named Interlocal Contract.

If you already acquired approval on your end, please review the new item and let me know that it will work for you and I will substitute it for us when I receive them, making sure the signature page lines up with the current agreement.

Please let me know if you have any questions or concerns so I may take care of them right away.

Thank you,

Ben Bohm | Management Analyst III | Network Engineering
State of Nevada | Department of Information Technology
T: (775) 684-5859 | F: (775) 684-4324| E: bnbohm@doit.nv.gov

This communication, including any attachments, may contain confidential information and is intended only for the individual or entity to which it is addressed. Any review, dissemination or copying of this communication by anyone other than the intended recipient is strictly prohibited. If you are not the intended recipient, please contact the sender by reply e-Mail and delete all copies of the original message.

From: Bennett Bohm
Sent: Tuesday, May 10, 2011 8:23 AM
To: 'Robert Quick'
Cc: Pat Sheehan
Subject: RE: Lander Co. Sheriff's office (Austin Mt.) agreement amendment

Hi Robert:

Please substitute the attached Attachment A with the current Attachment A I originally sent to you on 4/29...if the language change is ok with Lander County. Please reference item b. The parties agree...Our fiscal unit would like this language added to ensure all entities are notified of 'approved rates' when they are passed by the Legislature, but to remove 'approved' and substitute 'tentative rates' until such time that the rates are part of the approved budget. No dollar, payment arrangements or term dates are affected.

If you are ok with the change, just print three copies and remove the original Attachment A and substitute this one, but let me know if you do this so I can make note of the change.

Thank you and if you have any questions or concerns, please let me know,

Ben Bohm | Management Analyst III | Network Engineering
State of Nevada | Department of Information Technology
T: (775) 684-5859 | F: (775) 684-4324| E: bnbohm@doit.nv.gov

This communication, including any attachments, may contain confidential information and is intended only for the individual or entity to which it is addressed. Any review, dissemination or copying of this communication by anyone other than the intended recipient is strictly prohibited. If you are not the intended recipient, please contact the sender by reply e-Mail and delete all copies of the original message.

From: Bennett Bohm
Sent: Friday, April 29, 2011 2:38 PM
To: 'Robert Quick'
Cc: Pat Sheehan
Subject: FW: Lander Co. Sheriff's office (Austin Mt.) agreement amendment
Importance: High

Hi Robert:

Here is the Interlocal Agreement between DoIT and Lander County for rack space at Austin Mtn. As can be seen in the language and per your request, in Attachment A I. Rack Space Rental, item b. I have made the payable for payments to be either monthly in advance, or yearly in advance so if you are still thinking of moving to the USFS shelter, this will give you an out at month to month. But, if you were to terminate services with us and had already paid for a years' worth of service in advance, we would refund you the remaining amount you paid, as per the amount of months left over for that year, when you move out.

Also, per your request, no, we do not have any more space at the DoIT facility for any more rack space at this time.

If you still want to continue services after June 30, 2011, please move forward with printing out three (3) original agreement packages (Interlocal, Attach A and Attach B) and acquire your approval authorities signature on page 4 of 4 where indicated and also on the first page of Attachment B where indicated on all three originals. Please utilize blue ink for all signatures. Once approvals have been achieved please forward all three Interlocal agreement packages to my attention to 575 East Third Street, Carson City NV 89701.

Once I have acquired all State approvals, I will forward you one originally signed fully executable Interlocal with attachments for your files.

Thank you and if you have any questions at all please let me know,

Ben Bohm | Management Analyst III | Network Engineering
State of Nevada | Department of Information Technology
T: (775) 684-5859 | F: (775) 684-4324 | E: bnbohm@doit.nv.gov

This communication, including any attachments, may contain confidential information and is intended only for the individual or entity to which it is addressed. Any review, dissemination or copying of this communication by anyone other than the intended recipient is strictly prohibited. If you are not the intended recipient, please contact the sender by reply e-Mail and delete all copies of the original message.

From: Bennett Bohm
Sent: Friday, April 22, 2011 8:36 AM
To: 'rquick@landerso.org'
Cc: Pat Sheehan
Subject: RE: Lander Co. Sheriff's office (Austin Mt.) agreement amendment
Importance: High

Hi Robert:

It is that time again...would the Lander County Sheriff's office like to move forward with a new agreement for the one rack space at Austin Summit with the Department of Information Technology for two more years (or more if you wish, i.e. 4 years?)...if so, I will move forward with the agreements and get them to you for acquiring signatures as soon as possible.

Thank you,

Ben Bohm | Management Analyst III | Network Engineering
State of Nevada | Department of Information Technology
T: (775) 684-5859 | F: (775) 684-4324 | E: bnbohm@doit.nv.gov

This communication, including any attachments, may contain confidential information and is intended only for the individual or entity to which it is addressed. Any review, dissemination or copying of this communication by anyone other than the intended recipient is strictly prohibited. If you are not the intended recipient, please contact the sender by reply e-Mail and delete all copies of the original message.

From: Robert Quick [mailto:rquick@landerso.org]
Sent: Friday, October 15, 2010 10:20 AM
To: Bennett Bohm
Subject: RE: Lander Co. Sheriff's office (Austin Mt.) agreement amendment

My apologies for the delay. We were bumped from the agenda and the next meeting is October 28, 2010. I am in the hopes to get onto that agenda and have the Commission sign the agreement.

Robert W. Quick
Undersheriff
Lander County Sheriff's Office
Physical: 2 State Route 305
Mailing: Post Office Box 1625
Battle Mountain, Nevada 89820
(775) 635-1100, 230
(775) 635-2577 (fax)

From: Bennett Bohm [mailto:bnbohm@doit.nv.gov]
Sent: Thursday, September 30, 2010 10:46 AM
To: 'Robert Quick'
Cc: Pat Sheehan
Subject: Lander Co. Sheriff's office (Austin Mt.) agreement amendment

Hi Robert:

In reference to the amendment for the DoIT/Lander Co Sheriff's office lease for rack space at Austin Mountain that I sent out on 9/9/2010 to your office, have you received it yet and is it acceptable as is? If so, when can I expect it to be approved by Lander Co. and returned to me for approval through the State processes?

(I have attached a copy for you in case you did not receive it from me yet)

Let me know as time allows and thank you,

Ben Bohm, MA III

State of Nevada - Department of Information Technology
DoIT Facility - Admin Services
575 E Third St, CC 89701
Phone 775-684-5859
Fax 775-684-4324
bnbohm@doit.nv.gov

This communication, including any attachments, may contain confidential information and is intended only for the individual or entity to which it is addressed. Any review, dissemination or copying of this communication by anyone other

than the intended recipient is strictly prohibited. If you are not the intended recipient, please contact the sender by reply e-Mail and delete all copies of the original message.

INTRASTATE INTERLOCAL CONTRACT BETWEEN PUBLIC AGENCIES

A Contract between the State of Nevada
Acting By and Through Its

Department of Information Technology
400 W. King St., Suite 300
Carson City, Nevada, 89703-4204
Phone: 775-684-5800 Fax: 775-684-5846
(Henceforth known as "DoIT")

And

Lander County Sheriff's Office
#2 State Route 305
Battle Mountain, NV 89820
Phone: (775) 635-1100 Fax: (775) 635-8196
(Henceforth known as "Lander County")

WHEREAS, NRS 277.180 authorizes any one or more public agencies to contract with any one or more other public agencies to perform any governmental service, activity or undertaking which any of the public agencies entering into the contract is authorized by law to perform; and

WHEREAS, it is deemed that the services of DoIT hereinafter set forth are both necessary to Lander County and in the best interests of the State of Nevada;

NOW, THEREFORE, in consideration of the aforesaid premises, the parties mutually agree as follows:

1. REQUIRED APPROVAL. This Contract shall not become effective until and unless approved by appropriate official action of the governing body of each party.

2. DEFINITIONS. "State" means the State of Nevada and any State agency identified herein, its officers, employees and immune contractors as defined in NRS 41.0307.

3. CONTRACT TERM. This Contract shall be effective **July 1, 2011** subject to approval of the State Board of Examiners to **June 30, 2013**, unless sooner terminated by either party as set forth in this Contract.

4. TERMINATION. This Contract may be terminated by either party prior to the date set forth in paragraph (3), provided that a termination shall not be effective until **30** days after a party has served written notice upon the other party. This Contract may be terminated by mutual consent of both parties or unilaterally by either party without cause. The parties expressly agree that this Contract shall be terminated immediately if for any reason State and/or federal funding ability to satisfy this Contract is withdrawn, limited, or impaired.

5. NOTICE. All notices or other communications required or permitted to be given under this Contract shall be in writing and shall be deemed to have been duly given if delivered personally in hand, by telephonic facsimile with simultaneous regular mail, or mailed certified mail, return receipt requested, postage prepaid on the date posted, and addressed to the other party at the address set forth above.

6. INCORPORATED DOCUMENTS. The parties agree that the services to be performed shall be specifically described; this Contract incorporates the following attachments in descending order of constructive precedence:

7. CONSIDERATION. DoIT agrees to provide the services set forth in paragraph (6) at a cost of **$ per Attachment A** with the total Contract or installments payable: **for each item as described in Attachment A**, not exceeding **$3,775.38**. Any intervening end to an annual or biennial appropriation period shall be deemed an automatic renewal (not changing the overall Contract term) or a termination as the results of legislative appropriation may require.

8. ASSENT. The parties agree that the terms and conditions listed on incorporated attachments of this Contract are also specifically a part of this Contract and are limited only by their respective order of precedence and any limitations expressly provided.

9. INSPECTION & AUDIT.

   a. Books and Records. Each party agrees to keep and maintain under general accepted accounting principles full, true and complete records, agreements, books, and documents as are necessary to fully disclose to the State or United States Government, or their authorized representatives, upon audits or reviews, sufficient information to determine compliance with any applicable regulations and statutes.

   b. Inspection & Audit. Each party agrees that the relevant books, records (written, electronic, computer related or otherwise), including but not limited to relevant accounting procedures and practices of the party, financial statements and supporting documentation, and documentation related to the work product shall be subject, at any reasonable time, to inspection, examination, review, audit, and copying at any office or location where such records may be found, with or without notice by the other party, the State Auditor, Employment Security, the Department of Administration, Budget Division, the Nevada State Attorney General's Office or its Fraud Control Units, the State Legislative Auditor, and with regard to any federal funding, the relevant federal agency, the Comptroller General, the General Accounting Office, the Office of the Inspector General, or any of their authorized representatives.

   c. Period of Retention. All books, records, reports, and statements relevant to this Contract must be retained by each party for a minimum of three years and for five years if any federal funds are used in this Contract. The retention period runs from the date of termination of this Contract. Retention time shall be extended when an audit is scheduled or in progress for a period reasonably necessary to complete an audit and/or to complete any administrative and judicial litigation which may ensue.

10. BREACH; REMEDIES. Failure of either party to perform any obligation of this Contract shall be deemed a breach. Except as otherwise provided for by law or this Contract, the rights and remedies of the parties shall not be exclusive and are in addition to any other rights and remedies provided by law or equity, including but not limited to actual damages, and to a prevailing party reasonable attorneys' fees and costs. It is specifically agreed that reasonable attorneys' fees shall include without limitation $125 per hour for State-employed attorneys.

11. LIMITED LIABILITY. The parties will not waive and intend to assert available NRS chapter 41 liability limitations in all cases. Contract liability of both parties shall not be subject to punitive damages. To the extent applicable, actual contract damages for any breach shall be limited by NRS 353.260 and NRS 354.626.

12. FORCE MAJEURE. Neither party shall be deemed to be in violation of this Contract if it is prevented from performing any of its obligations hereunder due to strikes, failure of public transportation, civil or military authority, act of public enemy, accidents, fires, explosions, or acts of God, including, without limitation, earthquakes, floods, winds, or storms. In such an event the intervening cause must not be through the fault of the party asserting such an excuse, and the excused party is obligated to promptly perform in accordance with the terms of the Contract after the intervening cause ceases.

13. INDEMNIFICATION. Neither party waives any right or defense to indemnification that may exist in law or equity.

14. INDEPENDENT PUBLIC AGENCIES. The parties are associated with each other only for the purposes and to the extent set forth in this Contract, and in respect to performance of services pursuant to this Contract, each party is and shall be a public agency separate and distinct from the other party and, subject only to the terms of this Contract, shall have the sole right to supervise, manage, operate, control, and direct performance of the details incident to its duties under this Contract. Nothing contained in this Contract shall be deemed or construed to create a partnership or joint venture, to create relationships of an employer-employee or principal-agent, or to otherwise create any liability for one agency whatsoever with respect to the indebtedness, liabilities, and obligations of the other agency or any other party.

15. WAIVER OF BREACH. Failure to declare a breach or the actual waiver of any particular breach of the Contract or its material or nonmaterial terms by either party shall not operate as a waiver by such party of any of its rights or remedies as to any other breach.

16. SEVERABILITY. If any provision contained in this Contract is held to be unenforceable by a court of law or equity, this Contract shall be construed as if such provision did not exist and the nonenforceability of such provision shall not be held to render any other provision or provisions of this Contract unenforceable.

17. ASSIGNMENT. Neither party shall assign, transfer or delegate any rights, obligations or duties under this Contract without the prior written consent of the other party.

18. OWNERSHIP OF PROPRIETARY INFORMATION. Unless otherwise provided by law or this Contract, any reports, histories, studies, tests, manuals, instructions, photographs, negatives, blue prints, plans, maps, data, system designs, computer code (which is intended to be consideration under this Contract), or any other documents or drawings, prepared or in the course of preparation by either party in performance of its obligations under this Contract shall be the joint property of both parties.

19. PUBLIC RECORDS. Pursuant to NRS 239.010, information or documents may be open to public inspection and copying. The parties will have the duty to disclose unless a particular record is made confidential by law or a common law balancing of interests.

20. CONFIDENTIALITY. Each party shall keep confidential all information, in whatever form, produced, prepared, observed or received by that party to the extent that such information is confidential by law or otherwise required by this Contract.

21. PROPER AUTHORITY. The parties hereto represent and warrant that the person executing this Contract on behalf of each party has full power and authority to enter into this Contract and that the parties are authorized by law to perform the services set forth in paragraph (6).

22. GOVERNING LAW; JURISDICTION. This Contract and the rights and obligations of the parties hereto shall be governed by, and construed according to, the laws of the State of Nevada. The parties consent to the jurisdiction of the Nevada district courts for enforcement of this Contract.

23. ENTIRE AGREEMENT AND MODIFICATION. This Contract and its integrated attachment(s) constitute the entire agreement of the parties and such are intended as a complete and exclusive statement of the promises, representations, negotiations, discussions, and other agreements that may have been made in connection with the subject matter hereof. Unless an integrated attachment to this Contract specifically displays a mutual intent to amend a particular part of this Contract, general conflicts in language between any such attachment and this Contract shall be construed consistent with the terms of this Contract. Unless otherwise expressly authorized by the terms of this Contract, no modification or amendment to this Contract shall be binding upon the parties unless the same is in writing and signed by the respective parties hereto, approved by the State of Nevada Office of the Attorney General.

IN WITNESS WHEREOF, the parties hereto have caused this Contract to be signed and intend to be legally bound thereby.

Lander County Sheriff's Office Signature Date	Title
Lander County District Attorney Signature Date	Title
David Gustafson Date Department of Information Technology	Director/CIO Title
Signature – Nevada State Board of Examiners	APPROVED BY BOARD OF EXAMINERS
Approved as to form by:	On _____ (Date)
Deputy Attorney General for Attorney General, State of Nevada	On _____ (Date)

ATTACHMENT A

ADDITIONAL TERMS AND CONDITIONS

These Additional Terms and Conditions, attached to the Interlocal Agreement between the Department of Information Technology, hereinafter called DoIT, and Lander County Sheriff's Office hereinafter called Lander, for the following:

- Rack Space Rental

Any additional space or service requirements not covered in this Attachment will be subject to an amendment to this agreement as identified in this document.

Billing

Electronic payments and payment by check must include the State's Document number, the billing claim number and the period of service (e.g. August). Additionally, checks must be made out to (and sent to) the State of Nevada, Department of Information Technology, 400 W. King St. Suite 300, Carson City, Nevada, 89703-4204. Payments must be received by the State no later than the thirtieth (30th) day following the billed month.

I. Rack Space Rental

a. Lander is allowed rack space, defined as 2' x 2' x ceiling height space, at the following sites:

Site	County	Rack Space
Austin Mountain	Lander	1
TOTAL		**1**

b. The parties agree that rent is based on the then approved Legislative budget, and that the rates run on the State fiscal year, starting July 1st. The **FY 2012** approved fee for rental of each rack space is **$1,791.45** per year; for one (1) site space rentals the total annual balance due will be **$1,791.45**. Payments shall be made monthly or annually in advance, from **July 1, 2011** through **June 30, 2012** at the rate listed above. The **FY 2013** approved fee for rental of each rack space is **$1,983.93** per year; for one (1) site space rentals the total annual balance due will be **$1,983.93**. Payments shall be made monthly or annually in advance, from **July 1, 2012** through **June 30, 2013** at the rate listed above.

c. Lander shall comply with promptly and conform to all present and future laws, orders, ordinances, requirements, rules and regulations of all federal, state, county, municipal and other legally constituted authorities concerning the property and the conduct of its business thereon. Lander agrees to abide by all State Policies, Standards & Procedures during the term of the Agreement and any amendments or extensions thereof. Lander will not interfere with, impede, annoy or disturb DoIT's operation of the tower site, the tower, the building, and/or other users of the facility. Lander shall not allow access to the property by members of the general public. Lander shall not permit or commit any waste with respect to the property.

d. Structures, improvements or other property installed in the building(s) or at the site(s) by Lander shall be removed by Lander upon termination of this agreement or within sixty (60) days thereafter. Any such property not removed within the same sixty (60) day period shall become the property of DoIT.

e. Lander shall understand that the tower is an unmanned secured facility. Pursuant to the discharge of Lander's responsibilities to the Federal Communications Commission as a licensee of that federal agency, Lander may have reasonable access to the facilities described herein.

f. Access control card keys will be issued to Lander for DoIT sites requiring such access. The keys are active based on payment account balances. Site access will be suspended should accounts be delinquent in excess of ninety (90) days. Site access control card keys will be reactivated once accounts have been paid in full, to balance. Should the balance of payments not be made, site access will be granted subject to the DoIT escort and to the DoIT availability. Accounts exceeding one hundred and eighty (180) days delinquency will be regarded as closed and equipment will be removed.

g. If the facility becomes untenable by fire, wind, or other casualty and the equipment becomes inoperable as a result thereof, DoIT has the sole discretion to either: (a) terminate this Agreement upon thirty (30) days notice to the Lander; or (b) have the facility repaired, rehabilitated, or replaced at no expense to the Government within one hundred twenty (120) days of the date which the State is reasonably able to access the facility and undertake reconstruction or repairs. If the State elects to repair, rehabilitate, or replace the facility this Agreement shall not terminate, but the monthly use charge shall be abated on a per diem basis while the facility is untenable. If the State elects to repair, rehabilitate, or replace the facility and such work is not substantially completed within the one hundred twenty (120) day period, either party can terminate this Agreement as of the date of the fire or other casualty. Such termination must be by written notice to the other party not later than one-hundred-fifty (150) days after the facility becomes untenable. In the event of termination of the Agreement under this paragraph, the monthly use charge shall be apportioned on a per diem basis and paid to the date of the fire or other casualty.

h. At the sole option of DoIT, any damage caused by Lander shall either: (a) be repaired by Lander within thirty (30) days; or (b) Lander shall reimburse DoIT for the actual cost of repair.

i. DoIT or its designated representatives shall have the sole right initially and during the term of this Agreement to: (a) determine the locations of the equipment; (b) approve the size of the equipment (including any and all electrical connections therefore), and any replacements thereto; and (c) require Lander to take whatever reasonable action is necessary to eliminate objectionable interference by Lander's equipment with equipment of any other user sharing the tower prior to the commencement date of this Agreement.

j. Lander shall be responsible for obtaining, at its sole expense, all such authorizations, permits and approvals as may be required from any federal, state of local governmental agency with respect to the work to be performed by Lander hereunder.

k. Lander shall promptly pay for any and all work which it might contract in, on, upon, or about the tower site, the tower, and/or the building, and will not permit or suffer any construction liens to attach to the tower site, the tower or building as a result thereof, and shall promptly cause any claim for any such lien to be released, or to secure DoIT to its satisfaction in the event it desires to contest any such lien. Upon failure of Lander to remove such lien or charge within thirty (30) days of written notice thereof by DoIT, DoIT may satisfy the same and thereupon charge Lander the sum, together with all reasonable costs and expenses incurred in connection therewith, said amounts to be payable upon written demand by DoIT. Notwithstanding the foregoing, Lander hereby covenants and agrees that DoIT shall have prior approval of any contractor utilized for the installation of any equipment in, on, or upon the facility. Such contractors must provide evidence of the appropriate licensing and insurance.

l. Lander shall give DoIT prompt notice of the initiation of any claim made or suit which in any way affects or might affect DoIT, and DoIT shall have the right to defend and/or settle same to the extent of its own interest.

m. Unless otherwise noted here within, DoIT is the site caretaker. The caretaker will pay all power bills, assure that power supplies are functional, emergency generators maintained, and buildings in good repair, as applicable.

n. Lander understands that no representation or warranties have been made that use will be un-interrupted. Normal maintenance may result in short-term outages. Affected customers will be notified when possible.

o. Lander shall give notice of changes to services, including additions or removal of equipment or services no longer needed to the DoIT Help desk at 775-684-4333 or email helpdesk@doit.nv.gov.

ATTACHMENT B

State of Nevada
Department of Information Technology
Site Installation Standards

In order for all users to co-exist at DoIT Communications facilities, all users will be required to adhere to the same set of installation standards. All users, their employees and/or contractors are responsible for compliance to these site installation standards. A DoIT representative will be available to review and/or clarify these standards with the user's representative prior to or during equipment installation. Installation will be completed in a neat, clean and professional manner.

1. All equipment shall be installed in assigned places designated by DoIT.
2. Users name, phone number and frequencies shall be clearly marked on cabinet(s) or equipment rack(s).
3. Users FCC license or IRAC certificate shall be posted on the cabinet(s) or equipment rack(s).
4. Equipment shall be grounded to the site grounding system.
5. Ground kits shall be used on all transmission feedlines at the following locations: near the antenna, the point where the transmission feedline leaves the tower, and at the building entrance.
6. A coaxial surge protector shall be used on all feedlines, and shall be located inside the building near the entry bulkhead. The surge protector shall be connected to the ground buss bar located near the entry bulkhead.
7. Loose metal objects, snap-on clips and wire wraps are not permitted on the towers.
8. All metal parts used on the towers shall be stainless steel or hot-dip galvanized.
9. All transmission feedlines outside the building shall utilize a solid outer conductor.
10. All transmission feedlines and associated jumpers inside the building are required to be 100% shielded.
11. Loosely hung or excessively coiled cables are not permitted.
12. Interior cable runs shall be made in a neat, professional manner and approved by DoIT personnel.
13. UHF type connectors shall have a Teflon dielectric.
14. All transmitters shall include an isolator, harmonic filter and band pass filter, as specified on page two "Required Filtering for Transmitter Equipment".
15. In addition to the above standards, specific instructions may also apply.

I have read the above "Site Installation Standards" and agree to adhere to these standards.

Lander County: _____ Date: _____
(Signature)

Print Name: _____

Title: _____

ATTACHMENT B

Required Filtering for Transmitting Equipment

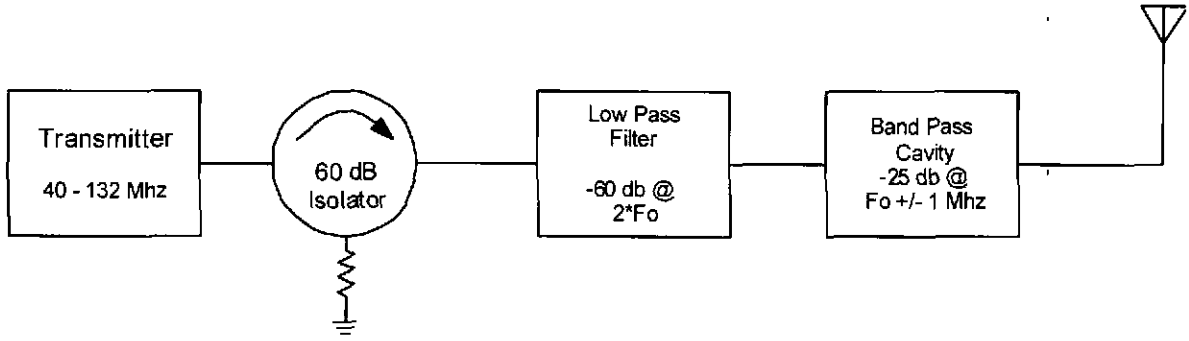

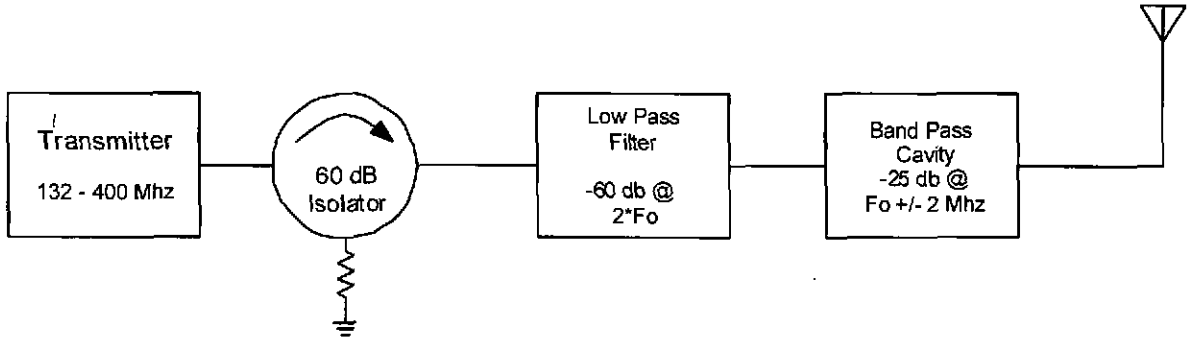

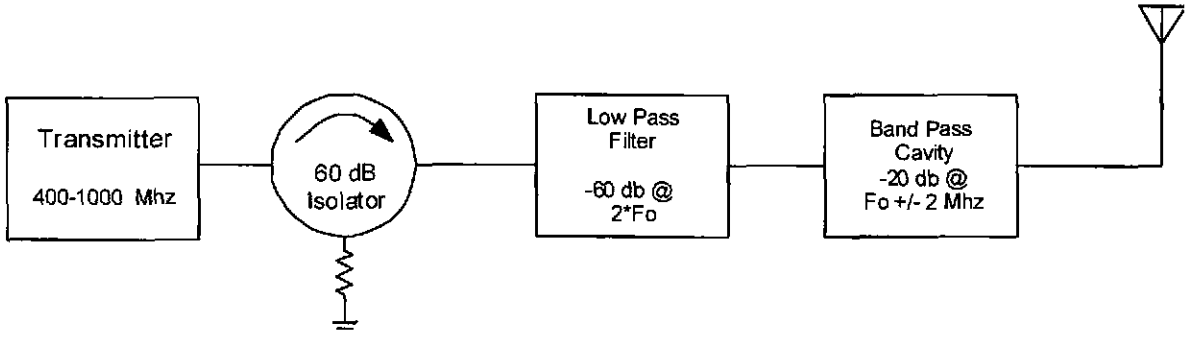

INTERLOCAL CONTRACT BETWEEN PUBLIC AGENCIES

A Contract between the State of Nevada
Acting By and Through Its

Department of Information Technology
400 W. King Street, Suite 300, Carson City, NV 89703-4204
Phone: 775-684-5800 Fax: 775-684-5846
(Henceforth known as the "DoIT")

And

FYI

Lander County Sheriff's Office
#2 State Route 305
Battle Mountain, NV 89820
Phone: (775) 635-1100; Fax: (775) 635-8196
(Henceforth known as "Lander County")

WHEREAS, NRS 277.180 authorizes any one or more public agencies to contract with any one or more other public agencies to perform any governmental service, activity or undertaking which any of the public agencies entering into the contract is authorized by law to perform; and

WHEREAS, it is deemed that the services of DoIT hereinafter set forth are both necessary to Lander County Sheriff's Office and in the best interests of the State of Nevada;

NOW, THEREFORE, in consideration of the aforesaid premises, the parties mutually agree as follows:

1. REQUIRED APPROVAL. This Contract shall not become effective until and unless approved by appropriate official action of the governing body of each party.

2. DEFINITIONS. "State" means the State of Nevada and any state agency identified herein, its officers, employees and immune contractors as defined in NRS 41.0307.

3. CONTRACT TERM. This Contract shall be effective **from July 1, 2011** subject to approval of the State Board of Examiners to **June 30, 2013**.

4. TERMINATION. This Contract may be terminated by either party prior to the date set forth in paragraph (3), provided that a termination shall not be effective until 30 days after a party has served written notice upon the other party. This Contract may be terminated by mutual consent of both parties or unilaterally by either party without cause. The parties expressly agree that this Contract shall be terminated immediately if for any reason Federal and/or State Legislature funding ability to satisfy this Contract is withdrawn, limited, or impaired.

5. NOTICE. All notices or other communications required or permitted to be given under this Contract shall be in writing and shall be deemed to have been duly given if delivered personally in hand, by telephonic facsimile with simultaneous regular mail, or mailed certified mail, return receipt requested, postage prepaid on the date posted, and addressed to the other party at the address set forth above.

6. INCORPORATED DOCUMENTS. The parties agree that the services to be performed shall be specifically described; this Contract incorporates the following attachments in descending order of constructive precedence:

ATTACHMENT A: ADDITIONAL TERMS AND CONDITIONS

FYI

ATTACHMENT B: SITE INSTALLATION STANDARDS

7. CONSIDERATION. DoIT agrees to provide the services set forth in paragraph (6) at a cost of **$ per Attachment A** with the total Contract or installments payable: **for each item as described in Attachment A** not to exceed **$3,775.38**, the not to exceed amount will reflect the final rates based on the then approved Nevada State Legislatures rates. DoIT agrees to provide, in writing, the rates for subsequent fiscal years that the Nevada State Legislature has approved.

8. ASSENT. The parties agree that the terms and conditions listed on incorporated attachments of this Contract are also specifically a part of this Contract and are limited only by their respective order of precedence and any limitations expressly provided.

9. INSPECTION & AUDIT.

a. Books and Records. Each party agrees to keep and maintain under general accepted accounting principles full, true and complete records, agreements, books, and documents as are necessary to fully disclose to the State or United States Government, or their authorized representatives, upon audits or reviews, sufficient information to determine compliance with all state and federal regulations and statutes.

b. Inspection & Audit. Each party agrees that the relevant books, records (written, electronic, computer related or otherwise), including but not limited to relevant accounting procedures and practices of the party, financial statements and supporting documentation, and documentation related to the work product shall be subject, at any reasonable time, to inspection, examination, review, audit, and copying at any office or location where such records may be found, with or without notice by the State Auditor, Employment Security, the Department of Administration, Budget Division, the Nevada State Attorney General's Office or its Fraud Control Units, the State Legislative Auditor, and with regard to any federal funding, the relevant federal agency, the Comptroller General, the General Accounting Office, the Office of the Inspector General, or any of their authorized representatives. Any request for government information must be requested in accordance with the "Freedom of Information Act".

c. Period of Retention. All books, records, reports, and statements relevant to this Contract must be retained a minimum three years and for five years if any federal funds are used in this Contract. The retention period runs from the date of termination of this Contract. Retention time shall be extended when an audit is scheduled or in progress for a period reasonably necessary to complete an audit and/or to complete any administrative and judicial litigation which may ensue.

10. BREACH; REMEDIES. Failure of either party to perform any obligation of this Contract shall be deemed a breach. Except, as otherwise provided for by law or this Contract, the rights and remedies of the parties shall be settled in accordance with FAR part 52.233-1.

11. LIMITED LIABILITY. The parties will not waive and intend to assert available NRS chapter 41 liability limitations in all cases. Contract liability of both parties shall not be subject to punitive damages. Actual damages for any State breach shall never exceed the amount of funds which have been appropriated for payment under this Contract, but not yet paid, for the fiscal year budget in existence at the time of the breach. The government cannot agree to a settlement in advance, the settlement must be settled in accordance with FAR part 52.233-1.

12. FORCE MAJEURE. Neither party shall be deemed to be in violation of this Contract if it is prevented from performing any of its obligations hereunder due to strikes, failure of public transportation, civil or military authority, act of public enemy, accidents, fires, explosions, or acts of God, including, without limitation, earthquakes, floods, winds, or storms. In such an event the intervening cause must not be through the fault of the party asserting such an excuse, and the excused party is obligated to promptly perform in accordance with the terms of the Contract after the intervening cause ceases.

FYI

13. INDEMNIFICATION. Any damages, losses, and expenses, including but not limited to reasonable attorneys' fees and costs, arising out of any alleged negligent or willful acts or omissions of the party, its officers, employees, and agents must be settled in accordance with FAR clause 52.233-1 "Disputes".

14. INDEPENDENT PUBLIC AGENCIES. DoIT and Lander County are associated with each other only for the purposes and to the extent set forth in this Contract, and in respect to performance of services pursuant to this Contract, each party is and shall be a public agency separate and distinct from the other party and, subject only to the terms of this Contract, shall have the sole right to supervise, manage, operate, control, and direct performance of the details incident to its duties under this Contract. Nothing contained in this Contract shall be deemed or construed to create a partnership or joint venture, to create relationships of an employer-employee or principal-agent, or to otherwise create any liability for one agency whatsoever with respect to the indebtedness, liabilities, and obligations of the other agency or any other party.

15. WAIVER OF BREACH. Failure to declare a breach or the actual waiver of any particular breach of the Contract or its material or nonmaterial terms by either party shall not operate as a waiver by such party of any of its rights or remedies as to any other breach.

16. SEVERABILITY. If any provision contained in this Contract is held to be unenforceable by a court of law or equity, this Contract shall be construed as if such provision did not exist and the non-enforceability of such provision shall not be held to render any other provision or provisions of this Contract unenforceable.

17. ASSIGNMENT. Neither party shall assign, transfer or delegate any rights, obligations or duties under this Contract without the prior written consent of the other party.

18. OWNERSHIP OF PROPRIETARY INFORMATION. Unless otherwise provided by law any reports, histories, studies, tests, manuals, instructions, photographs, negatives, blue prints, plans, maps, data, system designs, computer code (which is intended to be consideration under this Contract), or any other documents or drawings, prepared or in the course of preparation by either party in performance of its obligations under this Contract shall be the joint property of both parties.

19. PUBLIC RECORDS. Pursuant to NRS 239.010, information or documents may be open to public inspection and copying. The parties will have the duty to disclose unless a particular record is made confidential by law or a common law balancing of interests. Government (Lander County) records are subject to 5 USC 552, Freedom of Information Act.

20. CONFIDENTIALITY. Each party shall keep confidential all information, in whatever form, produced, prepared, observed or received by that party to the extent that such information is confidential by law or otherwise required by this Contract.

21. PROPER AUTHORITY. The parties hereto represent and warrant that the person executing this Contract on behalf of each party has full power and authority to enter into this Contract and that the parties are authorized by law to perform the services set forth in paragraph (6).

22. ENTIRE AGREEMENT AND MODIFICATION. This Contract and its integrated attachment(s) constitute the entire agreement of the parties and such are intended as a complete and exclusive statement of the promises, representations, negotiations, discussions, and other agreements that may have been made in connection with the subject matter hereof. Unless an integrated attachment to this Contract specifically displays a mutual intent to amend a particular part of this Contract, general conflicts in language between any such attachment and this Contract shall be construed consistent with the terms of this Contract. Unless otherwise expressly authorized by the terms of this Contract, no modification or amendment to this Contract shall be binding upon the parties unless the same is in writing and signed by the respective parties hereto, approved by the Office of the Attorney General.

IN WITNESS WHEREOF, the parties hereto have caused this Contract to be signed and intend to be legally bound thereby.

Lander County Signature	Date	Title
Department of Information Technology Signature	Date	Director/CIO Title
Signature – Board of Examiners		APPROVED BY BOARD OF EXAMINERS On:
Approved as to form by:	On:	(Date)
Deputy Attorney General for Attorney General		(Date)

FYI

ATTACHMENT A

FYI

ADDITIONAL TERMS AND CONDITIONS

These Additional Terms and Conditions, attached to the Interlocal Agreement between the Department of Information Technology, hereinafter called DoIT, and Lander County Sheriff's Office hereinafter called Lander, for the following:

- Rack Space Rental

Any additional space or service requirements not covered in this Attachment will be subject to an amendment to this agreement as identified in this document.

Billing

Electronic payments and payment by check must include the State's Document number, the billing claim number and the period of service (e.g. August). Additionally, checks must be made out to (and sent to) the State of Nevada, Department of Information Technology,. 400 W. King St. Suite 300, Carson City, Nevada, 89703-4204. Payments must be received by the State no later than the thirtieth (30th) day following the billed month.

I. Rack Space Rental

a. Lander is allowed rack space, defined as 2' x 2' x ceiling height space, at the following sites:

Site	County	Rack Space
Austin Mountain	Lander	1
TOTAL		**1**

b. The parties agree that rent is based on the Legislative approved budget, and that the rates run on the State fiscal year, starting July 1st. The **FY 2012** and **FY 2013** approved fee for rental of each rack space will be provided prior to the beginning of the State fiscal year. For budgetary purposes, the tentative fee for **FY 2012** for rental of each rack space is **$1,791.45** per year; for one (1) site space rentals the total annual balance due will be **$1,791.45**. The **FY 2013** approved fee for rental of each rack space is **$1,983.93** per year; for one (1) site space rentals the total annual balance due will be **$1,983.93**. Payments shall be made monthly or annually in advance, from **July 1, 2011** through the end of the contract at the fiscal year approved rate. Lander will be given notice in writing of Legislative approved budget rates prior to the start of **FY 2012** and **FY 2013**.

c. Lander shall comply with promptly and conform to all present and future laws, orders, ordinances, requirements, rules and regulations of all federal, state, county, municipal and other legally constituted authorities concerning the property and the conduct of its business thereon. Lander agrees to abide by all State Policies, Standards & Procedures during the term of the Agreement and any amendments or extensions thereof. Lander will not interfere with, impede, annoy or disturb DoIT's operation of the tower site, the tower, the building, and/or

FYI

other users of the facility. Lander shall not allow access to the property by members of the general public. Lander shall not permit or commit any waste with respect to the property.

d. Structures, improvements or other property installed in the building(s) or at the site(s) by Lander shall be removed by Lander upon termination of this agreement or within sixty (60) days thereafter. Any such property not removed within the same sixty (60) day period shall become the property of DoIT.

e. Lander shall understand that the tower is an unmanned secured facility. Pursuant to the discharge of Lander's responsibilities to the Federal Communications Commission as a licensee of that federal agency, Lander may have reasonable access to the facilities described herein.

f. Access control card keys will be issued to Lander for DoIT sites requiring such access. The keys are active based on payment account balances. Site access will be suspended should accounts be delinquent in excess of ninety (90) days. Site access control card keys will be reactivated once accounts have been paid in full, to balance. Should the balance of payments not be made, site access will be granted subject to the DoIT escort and to the DoIT availability. Accounts exceeding one hundred and eighty (180) days delinquency will be regarded as closed and equipment will be removed.

g. If the facility becomes untenable by fire, wind, or other casualty and the equipment becomes inoperable as a result thereof, DoIT has the sole discretion to either: (a) terminate this Agreement upon thirty (30) days notice to the Lander; or (b) have the facility repaired, rehabilitated, or replaced at no expense to the Government within one hundred twenty (120) days of the date which the State is reasonably able to access the facility and undertake reconstruction or repairs. If the State elects to repair, rehabilitate, or replace the facility this Agreement shall not terminate, but the monthly use charge shall be abated on a per diem basis while the facility is untenable. If the State elects to repair, rehabilitate, or replace the facility and such work is not substantially completed within the one hundred twenty (120) day period, either party can terminate this Agreement as of the date of the fire or other casualty. Such termination must be by written notice to the other party not later than one-hundred-fifty (150) days after the facility becomes untenable. In the event of termination of the Agreement under this paragraph, the monthly use charge shall be apportioned on a per diem basis and paid to the date of the fire or other casualty.

h. At the sole option of DoIT, any damage caused by Lander shall either: (a) be repaired by Lander within thirty (30) days; or (b) Lander shall reimburse DoIT for the actual cost of repair.

i. DoIT or its designated representatives shall have the sole right initially and during the term of this Agreement to: (a) determine the locations of the equipment; (b) approve the size of the equipment (including any and all electrical connections therefore), and any replacements thereto; and (c) require Lander to take whatever reasonable action is necessary to eliminate

FYI

objectionable interference by Lander's equipment with equipment of any other user sharing the tower prior to the commencement date of this Agreement.

j. Lander shall be responsible for obtaining, at its sole expense, all such authorizations, permits and approvals as may be required from any federal, state of local governmental agency with respect to the work to be performed by Lander hereunder.

k. Lander shall promptly pay for any and all work which it might contract in, on, upon, or about the tower site, the tower, and/or the building, and will not permit or suffer any construction liens to attach to the tower site, the tower or building as a result thereof, and shall promptly cause any claim for any such lien to be released, or to secure DoIT to its satisfaction in the event it desires to contest any such lien. Upon failure of Lander to remove such lien or charge within thirty (30) days of written notice thereof by DoIT, DoIT may satisfy the same and thereupon charge Lander the sum, together with all reasonable costs and expenses incurred in connection therewith, said amounts to be payable upon written demand by DoIT. Notwithstanding the foregoing, Lander hereby covenants and agrees that DoIT shall have prior approval of any contractor utilized for the installation of any equipment in, on, or upon the facility. Such contractors must provide evidence of the appropriate licensing and insurance.

l. Lander shall give DoIT prompt notice of the initiation of any claim made or suit which in any way affects or might affect DoIT, and DoIT shall have the right to defend and/or settle same to the extent of its own interest.

m. Unless otherwise noted here within, DoIT is the site caretaker. The caretaker will pay all power bills, assure that power supplies are functional, emergency generators maintained, and buildings in good repair, as applicable.

n. Lander understands that no representation or warranties have been made that use will be un-interrupted. Normal maintenance may result in short-term outages. Affected customers will be notified when possible.

o. Lander shall give notice of changes to services, including additions or removal of equipment or services no longer needed to the DoIT Help desk at 775-684-4333 or email helpdesk@doit.nv.gov.

ATTACHMENT B

FYI

State of Nevada
Department of Information Technology
Site Installation Standards

In order for all users to co-exist at DoIT Communications facilities, all users will be required to adhere to the same set of installation standards. All users, their employees and/or contractors are responsible for compliance to these site installation standards. A DoIT representative will be available to review and/or clarify these standards with the user's representative prior to or during equipment installation. Installation will be completed in a neat, clean and professional manner.

1. All equipment shall be installed in assigned places designated by DoIT.
2. Users name, phone number and frequencies shall be clearly marked on cabinet(s) or equipment rack(s).
3. Users FCC license or IRAC certificate shall be posted on the cabinet(s) or equipment rack(s).
4. Equipment shall be grounded to the site grounding system.
5. Ground kits shall be used on all transmission feedlines at the following locations: near the antenna, the point where the transmission feedline leaves the tower, and at the building entrance.
6. A coaxial surge protector shall be used on all feedlines, and shall be located inside the building near the entry bulkhead. The surge protector shall be connected to the ground buss bar located near the entry bulkhead.
7. Loose metal objects, snap-on clips and wire wraps are not permitted on the towers.
8. All metal parts used on the towers shall be stainless steel or hot-dip galvanized.
9. All transmission feedlines outside the building shall utilize a solid outer conductor.
10. All transmission feedlines and associated jumpers inside the building are required to be 100% shielded.
11. Loosely hung or excessively coiled cables are not permitted.
12. Interior cable runs shall be made in a neat, professional manner and approved by DoIT personnel.
13. UHF type connectors shall have a Teflon dielectric.
14. All transmitters shall include an isolator, harmonic filter and band pass filter, as specified on page two "Required Filtering for Transmitter Equipment".
15. In addition to the above standards, specific instructions may also apply.

I have read the above "Site Installation Standards" and agree to adhere to these standards.

Lander County: Ray H. Williams Sr (Signature) Date: 06-09-11

Print Name: RAY H. WILLIAMS, SR

Title: Vice Chairman

ATTACHMENT B

FYI

Required Filtering for Transmitting Equipment

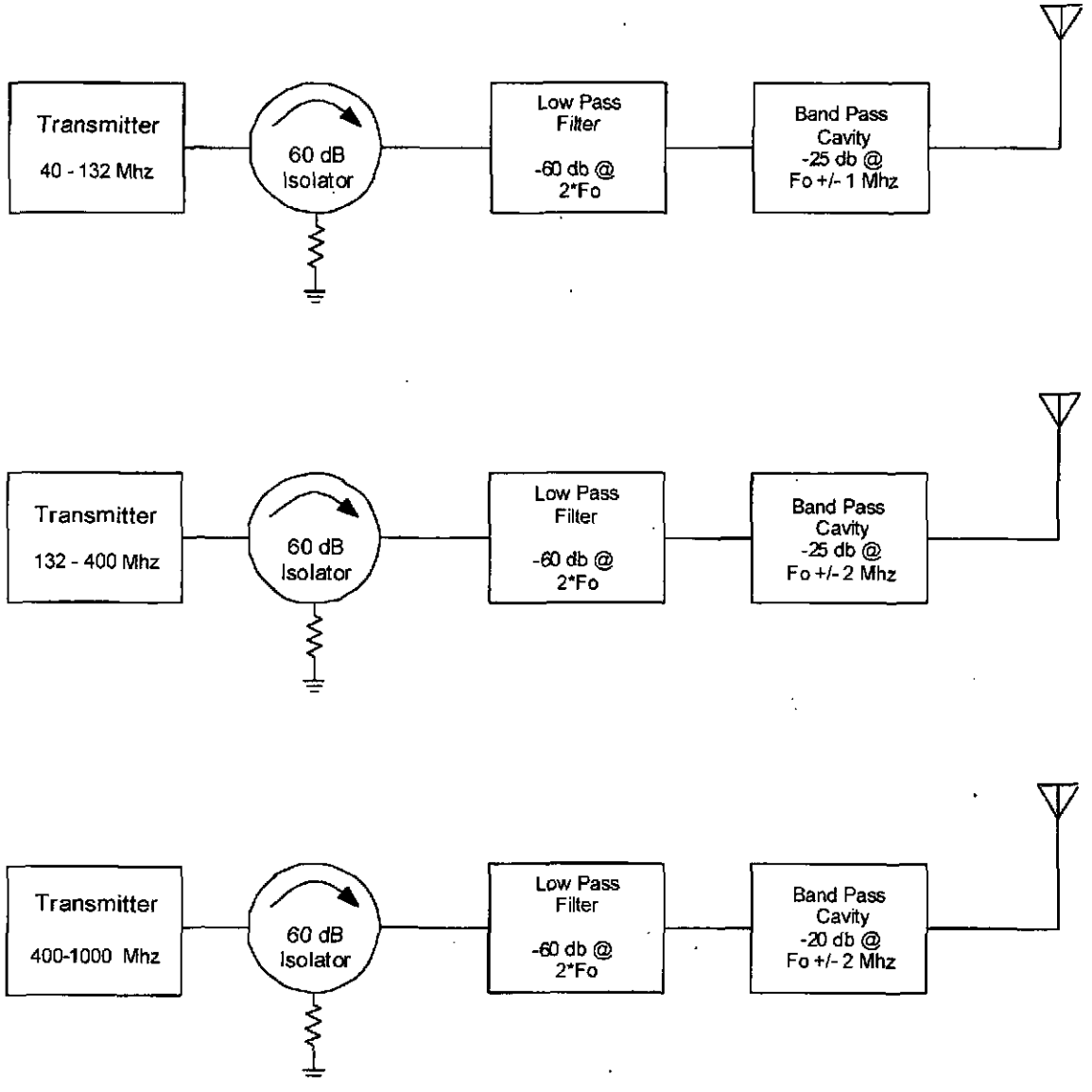

INTRASTATE INTERLOCAL CONTRACT BETWEEN PUBLIC AGENCIES

A Contract between the State of Nevada
Acting By and Through Its

Department of Information Technology
400 W. King St., Suite 300
Carson City, Nevada, 89703-4204
Phone: 775-684-5800 Fax: 775-684-5846
(Henceforth known as "DoIT")

And

Lander County Sheriff's Office
#2 State Route 305
Battle Mountain, NV 89820
Phone: (775) 635-1100 Fax: (775) 635-8196
(Henceforth known as "Lander County")

WHEREAS, NRS 277.180 authorizes any one or more public agencies to contract with any one or more other public agencies to perform any governmental service, activity or undertaking which any of the public agencies entering into the contract is authorized by law to perform; and

WHEREAS, it is deemed that the services of DoIT hereinafter set forth are both necessary to Lander County and in the best interests of the State of Nevada;

NOW, THEREFORE, in consideration of the aforesaid premises, the parties mutually agree as follows:

1. REQUIRED APPROVAL. This Contract shall not become effective until and unless approved by appropriate official action of the governing body of each party.

2. DEFINITIONS. "State" means the State of Nevada and any State agency identified herein, its officers, employees and immune contractors as defined in NRS 41.0307.

3. CONTRACT TERM. This Contract shall be effective **July 1, 2011** subject to approval of the State Board of Examiners to **June 30, 2013**, unless sooner terminated by either party as set forth in this Contract.

4. TERMINATION. This Contract may be terminated by either party prior to the date set forth in paragraph (3), provided that a termination shall not be effective until **30** days after a party has served written notice upon the other party. This Contract may be terminated by mutual consent of both parties or unilaterally by either party without cause. The parties expressly agree that this Contract shall be terminated immediately if for any reason State and/or federal funding ability to satisfy this Contract is withdrawn, limited, or impaired.

5. NOTICE. All notices or other communications required or permitted to be given under this Contract shall be in writing and shall be deemed to have been duly given if delivered personally in hand, by telephonic facsimile with simultaneous regular mail, or mailed certified mail, return receipt requested, postage prepaid on the date posted, and addressed to the other party at the address set forth above.

6. INCORPORATED DOCUMENTS. The parties agree that the services to be performed shall be specifically described; this Contract incorporates the following attachments in descending order of constructive precedence:

ATTACHMENT A: TERMS AND CONDITIONS
ATTACHMENT B: SITE INSTALLATION STANDARDS

7. CONSIDERATION. DoIT agrees to provide the services set forth in paragraph (6) at a cost of **$ per Attachment A** with the total Contract or installments payable: **for each item as described in Attachment A**, not exceeding **$3,775.38**. Any intervening end to an annual or biennial appropriation period shall be deemed an automatic renewal (not changing the overall Contract term) or a termination as the results of legislative appropriation may require.

8. ASSENT. The parties agree that the terms and conditions listed on incorporated attachments of this Contract are also specifically a part of this Contract and are limited only by their respective order of precedence and any limitations expressly provided.

9. INSPECTION & AUDIT:

   a. Books and Records. Each party agrees to keep and maintain under general accepted accounting principles full, true and complete records, agreements, books, and documents as are necessary to fully disclose to the State or United States Government, or their authorized representatives, upon audits or reviews, sufficient information to determine compliance with any applicable regulations and statutes.

   b. Inspection & Audit. Each party agrees that the relevant books, records (written, electronic, computer related or otherwise), including but not limited to relevant accounting procedures and practices of the party, financial statements and supporting documentation, and documentation related to the work product shall be subject, at any reasonable time, to inspection, examination, review, audit, and copying at any office or location where such records may be found, with or without notice by the other party, the State Auditor, Employment Security, the Department of Administration, Budget Division, the Nevada State Attorney General's Office or its Fraud Control Units, the State Legislative Auditor, and with regard to any federal funding, the relevant federal agency, the Comptroller General, the General Accounting Office, the Office of the Inspector General, or any of their authorized representatives.

   c. Period of Retention. All books, records, reports, and statements relevant to this Contract must be retained by each party for a minimum of three years and for five years if any federal funds are used in this Contract. The retention period runs from the date of termination of this Contract. Retention time shall be extended when an audit is scheduled or in progress for a period reasonably necessary to complete an audit and/or to complete any administrative and judicial litigation which may ensue.

10. BREACH; REMEDIES. Failure of either party to perform any obligation of this Contract shall be deemed a breach. Except as otherwise provided for by law or this Contract, the rights and remedies of the parties shall not be exclusive and are in addition to any other rights and remedies provided by law or equity, including but not limited to actual damages, and to a prevailing party reasonable attorneys' fees and costs. It is specifically agreed that reasonable attorneys' fees shall include without limitation $125 per hour for State-employed attorneys.

11. LIMITED LIABILITY. The parties will not waive and intend to assert available NRS chapter 41 liability limitations in all cases. Contract liability of both parties shall not be subject to punitive damages. To the extent applicable, actual contract damages for any breach shall be limited by NRS 353.260 and NRS 354.626.

12. FORCE MAJEURE. Neither party shall be deemed to be in violation of this Contract if it is prevented from performing any of its obligations hereunder due to strikes, failure of public transportation, civil or military authority, act of public enemy, accidents, fires, explosions, or acts of God, including, without limitation, earthquakes, floods, winds, or storms. In such an event the intervening cause must not be through the fault of the party asserting such an excuse, and the excused party is obligated to promptly perform in accordance with the terms of the Contract after the intervening cause ceases.

13. INDEMNIFICATION. Neither party waives any right or defense to indemnification that may exist in law or equity.

14. INDEPENDENT PUBLIC AGENCIES. The parties are associated with each other only for the purposes and to the extent set forth in this Contract, and in respect to performance of services pursuant to this Contract, each party is and shall be a public agency separate and distinct from the other party and, subject only to the terms of this Contract, shall have the sole right to supervise, manage, operate, control, and direct performance of the details incident to its duties under this Contract. Nothing contained in this Contract shall be deemed or construed to create a partnership or joint venture, to create relationships of an employer-employee or principal-agent, or to otherwise create any liability for one agency whatsoever with respect to the indebtedness, liabilities, and obligations of the other agency or any other party.

15. WAIVER OF BREACH. Failure to declare a breach or the actual waiver of any particular breach of the Contract or its material or nonmaterial terms by either party shall not operate as a waiver by such party of any of its rights or remedies as to any other breach.

16. SEVERABILITY. If any provision contained in this Contract is held to be unenforceable by a court of law or equity, this Contract shall be construed as if such provision did not exist and the nonenforceability of such provision shall not be held to render any other provision or provisions of this Contract unenforceable.

17. ASSIGNMENT. Neither party shall assign, transfer or delegate any rights, obligations or duties under this Contract without the prior written consent of the other party.

18. OWNERSHIP OF PROPRIETARY INFORMATION. Unless otherwise provided by law or this Contract, any reports, histories, studies, tests, manuals, instructions, photographs, negatives, blue prints, plans, maps, data, system designs, computer code (which is intended to be consideration under this Contract), or any other documents or drawings, prepared or in the course of preparation by either party in performance of its obligations under this Contract shall be the joint property of both parties.

19. PUBLIC RECORDS. Pursuant to NRS 239.010, information or documents may be open to public inspection and copying. The parties will have the duty to disclose unless a particular record is made confidential by law or a common law balancing of interests.

20. CONFIDENTIALITY. Each party shall keep confidential all information, in whatever form, produced, prepared, observed or received by that party to the extent that such information is confidential by law or otherwise required by this Contract.

21. PROPER AUTHORITY. The parties hereto represent and warrant that the person executing this Contract on behalf of each party has full power and authority to enter into this Contract and that the parties are authorized by law to perform the services set forth in paragraph (6).

22. GOVERNING LAW; JURISDICTION. This Contract and the rights and obligations of the parties hereto shall be governed by, and construed according to, the laws of the State of Nevada. The parties consent to the jurisdiction of the Nevada district courts for enforcement of this Contract.

23. ENTIRE AGREEMENT AND MODIFICATION. This Contract and its integrated attachment(s) constitute the entire agreement of the parties and such are intended as a complete and exclusive statement of the promises, representations, negotiations, discussions, and other agreements that may have been made in connection with the subject matter hereof. Unless an integrated attachment to this Contract specifically displays a mutual intent to amend a particular part of this Contract, general conflicts in language between any such attachment and this Contract shall be construed consistent with the terms of this Contract. Unless otherwise expressly authorized by the terms of this Contract, no modification or amendment to this Contract shall be binding upon the parties unless the same is in writing and signed by the respective parties hereto, approved by the State of Nevada Office of the Attorney General.

IN WITNESS WHEREOF, the parties hereto have caused this Contract to be signed and intend to be legally bound thereby.

Lander County Sheriff's Office Signature Date	Title
Lander County District Attorney Signature Date	Title
David Gustafson Date Department of Information Technology	Director/CIO Title
Signature – Nevada State Board of Examiners	APPROVED BY BOARD OF EXAMINERS
Approved as to form by:	On _____ (Date)
Deputy Attorney General for Attorney General, State of Nevada	On _____ (Date)

ATTACHMENT A

ADDITIONAL TERMS AND CONDITIONS

These Additional Terms and Conditions, attached to the Interlocal Agreement between the Department of Information Technology, hereinafter called DoIT, and Lander County Sheriff's Office hereinafter called Lander, for the following:

- Rack Space Rental

Any additional space or service requirements not covered in this Attachment will be subject to an amendment to this agreement as identified in this document.

Billing

Electronic payments and payment by check must include the State's Document number, the billing claim number and the period of service (e.g. August). Additionally, checks must be made out to (and sent to) the State of Nevada, Department of Information Technology, 400 W. King St. Suite 300, Carson City, Nevada, 89703-4204. Payments must be received by the State no later than the thirtieth (30th) day following the billed month.

I. Rack Space Rental

a. Lander is allowed rack space, defined as 2' x 2' x ceiling height space, at the following sites:

Site	County	Rack Space
Austin Mountain	Lander	1
TOTAL		**1**

b. The parties agree that rent is based on the then approved Legislative budget, and that the rates run on the State fiscal year, starting July 1st. The **FY 2012** approved fee for rental of each rack space is **$1,791.45** per year; for one (1) site space rentals the total annual balance due will be **$1,791.45**. Payments shall be made monthly or annually in advance, from **July 1, 2011** through **June 30, 2012** at the rate listed above. The **FY 2013** approved fee for rental of each rack space is **$1,983.93** per year; for one (1) site space rentals the total annual balance due will be **$1,983.93**. Payments shall be made monthly or annually in advance, from **July 1, 2012** through **June 30, 2013** at the rate listed above.

c. Lander shall comply with promptly and conform to all present and future laws, orders, ordinances, requirements, rules and regulations of all federal, state, county, municipal and other legally constituted authorities concerning the property and the conduct of its business thereon. Lander agrees to abide by all State Policies, Standards & Procedures during the term of the Agreement and any amendments or extensions thereof. Lander will not interfere with, impede, annoy or disturb DoIT's operation of the tower site, the tower, the building, and/or other users of the facility. Lander shall not allow access to the property by members of the general public. Lander shall not permit or commit any waste with respect to the property.

d. Structures, improvements or other property installed in the building(s) or at the site(s) by Lander shall be removed by Lander upon termination of this agreement or within sixty (60) days thereafter. Any such property not removed within the same sixty (60) day period shall become the property of DoIT.

e. Lander shall understand that the tower is an unmanned secured facility. Pursuant to the discharge of Lander's responsibilities to the Federal Communications Commission as a licensee of that federal agency, Lander may have reasonable access to the facilities described herein.

f. Access control card keys will be issued to Lander for DoIT sites requiring such access. The keys are active based on payment account balances. Site access will be suspended should accounts be delinquent in excess of ninety (90) days. Site access control card keys will be reactivated once accounts have been paid in full, to balance. Should the balance of payments not be made, site access will be granted subject to the DoIT escort and to the DoIT availability. Accounts exceeding one hundred and eighty (180) days delinquency will be regarded as closed and equipment will be removed.

g. If the facility becomes untenable by fire, wind, or other casualty and the equipment becomes inoperable as a result thereof, DoIT has the sole discretion to either: (a) terminate this Agreement upon thirty (30) days notice to the Lander; or (b) have the facility repaired, rehabilitated, or replaced at no expense to the Government within one hundred twenty (120) days of the date which the State is reasonably able to access the facility and undertake reconstruction or repairs. If the State elects to repair, rehabilitate, or replace the facility this Agreement shall not terminate, but the monthly use charge shall be abated on a per diem basis while the facility is untenable. If the State elects to repair, rehabilitate, or replace the facility and such work is not substantially completed within the one hundred twenty (120) day period, either party can terminate this Agreement as of the date of the fire or other casualty. Such termination must be by written notice to the other party not later than one-hundred-fifty (150) days after the facility becomes untenable. In the event of termination of the Agreement under this paragraph, the monthly use charge shall be apportioned on a per diem basis and paid to the date of the fire or other casualty.

h. At the sole option of DoIT, any damage caused by Lander shall either: (a) be repaired by Lander within thirty (30) days; or (b) Lander shall reimburse DoIT for the actual cost of repair.

i. DoIT or its designated representatives shall have the sole right initially and during the term of this Agreement to: (a) determine the locations of the equipment; (b) approve the size of the equipment (including any and all electrical connections therefore), and any replacements thereto; and (c) require Lander to take whatever reasonable action is necessary to eliminate objectionable interference by Lander's equipment with equipment of any other user sharing the tower prior to the commencement date of this Agreement.

j. Lander shall be responsible for obtaining, at its sole expense, all such authorizations, permits and approvals as may be required from any federal, state of local governmental agency with respect to the work to be performed by Lander hereunder.

k. Lander shall promptly pay for any and all work which it might contract in, on, upon, or about the tower site, the tower, and/or the building, and will not permit or suffer any construction liens to attach to the tower site, the tower or building as a result thereof, and shall promptly cause any claim for any such lien to be released, or to secure DoIT to its satisfaction in the event it desires to contest any such lien. Upon failure of Lander to remove such lien or charge within thirty (30) days of written notice thereof by DoIT, DoIT may satisfy the same and thereupon charge Lander the sum, together with all reasonable costs and expenses incurred in connection therewith, said amounts to be payable upon written demand by DoIT. Notwithstanding the foregoing, Lander hereby covenants and agrees that DoIT shall have prior approval of any contractor utilized for the installation of any equipment in, on, or upon the facility. Such contractors must provide evidence of the appropriate licensing and insurance.

l. Lander shall give DoIT prompt notice of the initiation of any claim made or suit which in any way affects or might affect DoIT, and DoIT shall have the right to defend and/or settle same to the extent of its own interest.

m. Unless otherwise noted here within, DoIT is the site caretaker. The caretaker will pay all power bills, assure that power supplies are functional, emergency generators maintained, and buildings in good repair, as applicable.

n. Lander understands that no representation or warranties have been made that use will be un-interrupted. Normal maintenance may result in short-term outages. Affected customers will be notified when possible.

o. Lander shall give notice of changes to services, including additions or removal of equipment or services no longer needed to the DoIT Help desk at 775-684-4333 or email helpdesk@doit.nv.gov.

ATTACHMENT B

State of Nevada
Department of Information Technology
Site Installation Standards

In order for all users to co-exist at DoIT Communications facilities, all users will be required to adhere to the same set of installation standards. All users, their employees and/or contractors are responsible for compliance to these site installation standards. A DoIT representative will be available to review and/or clarify these standards with the user's representative prior to or during equipment installation. Installation will be completed in a neat, clean and professional manner.

1. All equipment shall be installed in assigned places designated by DoIT.
2. Users name, phone number and frequencies shall be clearly marked on cabinet(s) or equipment rack(s).
3. Users FCC license or IRAC certificate shall be posted on the cabinet(s) or equipment rack(s).
4. Equipment shall be grounded to the site grounding system.
5. Ground kits shall be used on all transmission feedlines at the following locations: near the antenna, the point where the transmission feedline leaves the tower, and at the building entrance.
6. A coaxial surge protector shall be used on all feedlines, and shall be located inside the building near the entry bulkhead. The surge protector shall be connected to the ground buss bar located near the entry bulkhead.
7. Loose metal objects, snap-on clips and wire wraps are not permitted on the towers.
8. All metal parts used on the towers shall be stainless steel or hot-dip galvanized.
9. All transmission feedlines outside the building shall utilize a solid outer conductor.
10. All transmission feedlines and associated jumpers inside the building are required to be 100% shielded.
11. Loosely hung or excessively coiled cables are not permitted.
12. Interior cable runs shall be made in a neat, professional manner and approved by DoIT personnel.
13. UHF type connectors shall have a Teflon dielectric.
14. All transmitters shall include an isolator, harmonic filter and band pass filter, as specified on page two "Required Filtering for Transmitter Equipment".
15. In addition to the above standards, specific instructions may also apply.

I have read the above "Site Installation Standards" and agree to adhere to these standards.

Lander County: Steven Stienmetz (Signature) Date: 6/28/2024

Print Name: Steven Stienmetz

Title: Chair

ATTACHMENT B

Required Filtering for Transmitting Equipment

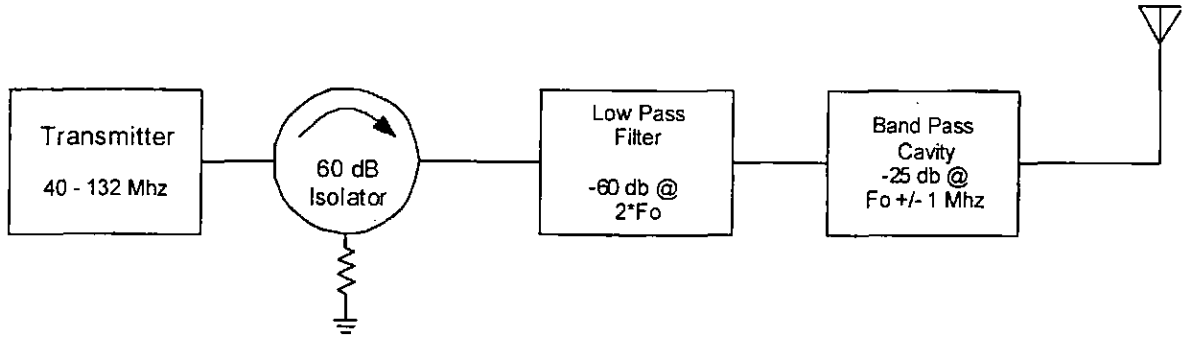

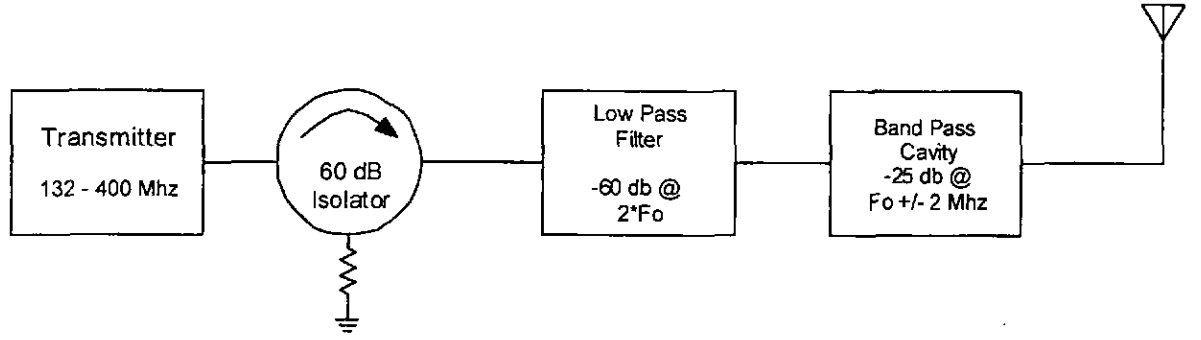

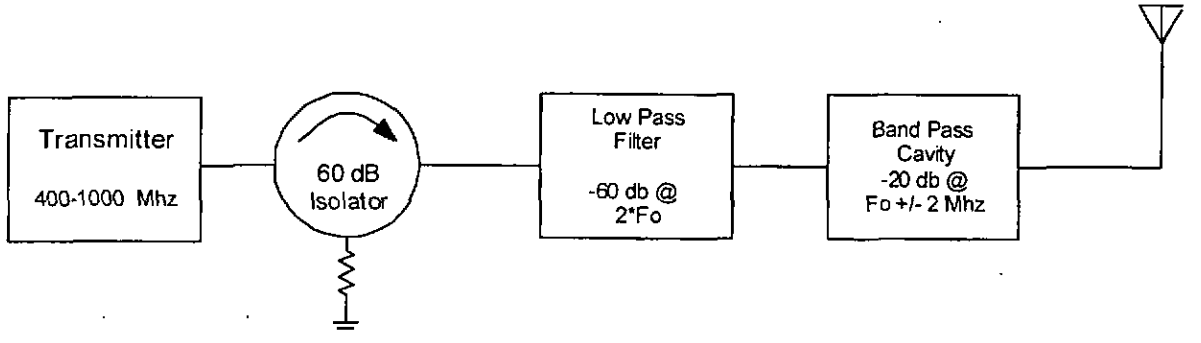

LANDER COUNTY COMMISSION MEETING
June 28, 2011

AGENDA ITEM NO. 12

THE REQUESTED ACTION OF THE LANDER COUNTY COMMISSION IS A:
Discussion and possible action regarding funding for Battle Mountain 3rd and 4th of July events and other matters properly relating thereto.

Public comment.

Background:

The proposal to provide funding for the Battle Mountain 3rd and 4th of July events is brought before the Commission for consideration.

Mr. Vidal Sandoval will address the Commission on this item.

Recommended Action:

It is recommended that the Commission provide funding for the Battle Mountain 3rd and 4th of July events to be provided from the Fiscal Year 2011-2012 Battle Mountain Town Fund.

AGENDA REQUEST FORM

COMMISSIONER MEETING DATE: _____

NAME: VIDAL SANDOVAL REPRESENTING: _____

ADDRESS: 63 WEST 3rd St Battle Mtn., NV 89820

PHONE (H): 775-635-8235 Cel. (W): 775-771-6986 (FAX): _____

WHICH NUMBER SHOULD WE CALL DURING NORMAL BUSINESS HOURS: 775-771-6986

WHO WILL BE ATTENDING THE MEETING: VIDAL SANDOVAL

JOB TITLE: JULY 4th DIRECTOR

SPECIFIC REQUEST TO BE PLACED ON THE AGENDA: DISCUSSION & possible ACTION Regarding funding For 3rd & 4th OF JULY EVENTS.

WHAT ACTION WOULD YOU LIKE THE BOARD TO TAKE TO RESOLVE THIS ISSUE? PROVIDE FUNDING FOR 4th OF JULY EVENTS

ARE THERE ANY COSTS ASSOCIATED WITH YOUR REQUEST: YES X NO ___
AMOUNT: ?

HAS THIS ISSUE BEEN DISCUSSED AT A PRIOR COMMISSION MEETING? YES ~~X~~ NO X
WHEN? _____

WILL YOU BE PRESENTING WRITTEN INFORMATION AT THE MEETING? YES X NO ___

HAVE YOU DISCUSSED THIS ISSUE WITH THE AFFECTED DEPT HEAD?: YES X NO ___

FOR REVIEW BY:

AIRPORT	___	DIST. ATTY.	___	SENIOR CTR.	___
AMBULANCE	___	EXE. DIR.	___	SHERIFF	___
ARGENTA J. P.	___	FIRE	___	SOCIAL SVC.	___
ASSESSOR	___	GOLF	___	TREASURER	___
AUSTIN J.P.	___	PARKS & REC.	___	W & S	___
CLERK	___	PUBLIC WORKS	___	OTHER	___
COMM. DEVT.	___	RECORDER	___		

THE EXECUTIVE DIRECTOR RESERVES THE RIGHT TO REJECT OR RECOMMEND TABLING ALL AGENDA REQUESTS FOR INSUFFICIENT INFORMATION.

ALL INFORMATION STATED IS CORRECT AND TRUE TO MY KNOWLEDGE.....

VIDAL SANDOVAL DATE: 6-17-11

BOARD MEETS THE 2ND AND 4TH THURSDAY OF EACH MONTH
COMMISSION FAX (775) 635-5332

12

Jukebox Party Express

P O Box 745
Meridian, ID 83680

Invoice

DATE	INVOICE #
6/16/2011	11674

BILL TO

BAttle Mountain Chamber Of Commerce
Vidal Sandoval (775)771-6986
vidalsandoval@sbcglobal.net
July 4, 2011 10-5 Setup 7AM

TERMS	PROJECT

QUANTITY	DESCRIPTION	RATE	AMOUNT
1	Jump House	100.00	100.00
1	14' Dry Slide	150.00	150.00
1	Obstacle Course	500.00	500.00
1	The Gladiator Joust	400.00	400.00
1	Giant Slide	600.00	600.00
1	Bungee Ball	400.00	400.00
1	Miscellaneous Human Bowling	600.00	600.00
1	Gyro/Orbitron	500.00	500.00
1	Bungee Run	400.00	400.00
1	Bungee Bull	500.00	500.00
1	Bell Ringer	250.00	250.00
1	Travel Expenses	400.00	400.00
1	Discount	-250.00	-250.00
	Sales Tax	6.00%	0.00

Inflatables MUST be completely dry by the time of pickup or there will be a $25.00 charge

Total	$4,550.00
Payments/Credits	$0.00
Balance Due	$4,550.00

Hi, vidal Sign Out All new att.net Mail | Help Mail AT&T

Search Search Web

Get Your FREE Credit Score 814 Straight from The Source CONTINUE TransUnion.

Mail Contacts Calendar Notepad What's New? Mobile Mail Options

Check Mail New Mail Search Try the new att.net Mail

Someone Searched You?

Folders
Inbox
Drafts
Sent
Spam (2) [Empty]
Trash [Empty]
My Photos
My Attachments

Chat & Mobile Text [Hide]
I am Available
0 Online Contacts [Add]
No contacts online right now.
Start a New Chat
1 Mobile Contact [Add]
Joe Ysias 775-830-9...
Not Listed? New Text
Settings

My Folders [Add - Edit]
Air Splat . Co...
B.M Home
Big Steve Back...
Ebay
FARMERS INSURA...
Grupo Guadalup...
I.B.E.W
itunes
job recruiter
las vegas home
Las Vegas Shor...
longley lane W...
myspace.com
Newmont Gold C...
Norma
norton securit...
Notes
nv. div. of wi...
pm pos.dan mal...
Reno Home 7420...
Retailer Purch...
Solid Ground C...
southwest airl...
ticket master ...
Vidal Recreati...

Previous | Next | Back to Messages Mark as Unread | Print

Delete Reply Forward Spam Move...

Gig ID #940123 - Bid From Whiskey & Wine Wednesday, June 22, 2011 10:34 AM

From: "GigMasters.com" <booking@gigmasters.com>
To: "Vidal Sandoval" <vidalsandoval@sbcglobal.net>

gig MASTERS the life of the party

Dear Vidal,

Good news! Whiskey & Wine (Not Rated) of Elko, NV is currently available for your July 4th Party on 7/3/2011.

Bid

Based on the information you provided, the rate for this event will be $400.00 for the time period requested. This will be for 4 performer(s). There will be **no** breaks. There will be no additional travel/lodging charge. There is no deposit required for this event. The balance of $400.00 will be due on 7/3/2011. The balance is non-refundable.

Additional Comments:

Hi! Go ahead and contact me about the start time you would like. Also if possible a flat bed trailer would help to get us off the ground. Talk to you soon!

How to Hire (secure)

If you would like to book Whiskey & Wine securely, please click here.
If you book Whiskey & Wine for your event, you will be charged a 5% booking fee ($20 minimum) which is owed to GigMasters.

Why Book with Gigmasters

Over 100,000 people have trusted GigMasters with their lives' most special events – everything from weddings to birthday parties. Booking with GigMasters entitles you to our Deposit Guarantee and the hands-on attention of our Customer Specialists who work hard to ensure that the entire process goes smoothly – from booking through show time.

How to Contact Whiskey & Wine

Have questions about this bid? Want to talk more with **Whiskey & Wine** before making your decision? Go ahead and contact them directly...
Telephone: (775) 340 4334
E-mail: whiskeyandwine.nv@gmail.com
Website:
GigMasters Press kit: http://www.gigmasters.com/cover-band/Whiskey--Wine/

How to Close Your Event

If you would like to close your event to further bids, please click here.

More Questions?

If you have questions for **GigMasters** or would like to receive more bids like this one, feel free to reply to this email, visit our Help Center, or call one of our Customer Specialists at 866-342-9794.

Thank you for trusting GigMasters with your special event.

Copyright © 1997-2011 GigMasters.com, Inc.
33 South Main Street, Norwalk, CT 06854. All rights reserved.
Privacy Policy: http://www.gigmasters.com/privacy.asp
Unsubscribe: http://www.gigmasters.com/u.asp?e=vidalsandoval@sbcglobal.net

This email was sent Wednesday, June 22, 2011 1:34:26 PM EST to vidalsandoval@sbcglobal.net.

Jukebox Party Express

P O Box 745
Meridian, ID 83680

Invoice

DATE	INVOICE #
6/16/2011	11674

BILL TO
BAttle Mountain Chamber Of Commerce Vidal Sandoval (775)771-6986 vidalsandoval@sbcglobal.net July 4, 2011 10-5 Setup 7AM

TERMS	PROJECT

QUANTITY	DESCRIPTION	RATE	AMOUNT
1	Jump House	100.00	100.00
0	14' Dry Slide	150.00	0.00
1	Obstacle Course	500.00	500.00
1	The Gladiator Joust	400.00	400.00
1	Giant Slide	600.00	600.00
1	Bungee Ball	400.00	400.00
1	Miscellaneous Human Bowling	600.00	600.00
1	Gyro/Orbitron	500.00	500.00
1	Bungee Run	400.00	400.00
1	Bungee Bull	500.00	500.00
1	Bell Ringer	250.00	250.00
1	Travel Expenses	400.00	400.00
1	Discount	-250.00	-250.00
	Sales Tax	6.00%	0.00

Total	$4,400.00
Payments/Credits	$0.00
Balance Due	$4,400.00

Inflatables MUST be completely dry by the time of pickup or there will be a $25.00 charge

400

+ 150.00

[redacted]

[redacted]

$ 4550.00

SPECIAL AGENDA

LANDER COUNTY COMMISSIONERS MEETING
TOWN BOARD OF BATTLE MOUNTAIN & AUSTIN
BOARD OF COUNTY HIGHWAY COMMISSIONERS

JUNE 28, 2011

LANDER COUNTY COURTHOUSE
COMMISSIONERS CHAMBER
315 SOUTH HUMBOLDT STREET
BATTLE MOUNTAIN, NEVADA

Also Via Teleconference At

AUSTIN COURTHOUSE
COMMISSION OFFICE
122 MAIN STREET
AUSTIN, NEVADA

9:00 A.M. Call to Order
Pledge of Allegiance
*Approval of Agenda Notice
*Payment of Bills
*Payroll Change Requests
Public Comment - For non-agendized items only

TREASURER

*(1) Discuss and approve/disapprove Resolution No. 2011-09, a resolution certifying the Ad Valorem (property) tax rate required for the fiscal year July 1, 2011 through June 30, 2012 in accordance with NRS 361.460 and other matters properly relating thereto.

Public comment.

*(2) Discussion and possible action regarding surplus sale of June 15, 2011: a) results of sale; b) excess items; c) designation of a surplus building; and other matters properly relating thereto.

Public comment.

*(3) Discussion regarding letter on one (1) year delinquent taxes per NRS 361.5648 and NRS 361.565 and other matters properly relating thereto.

Public comment.

*(4) Discuss and approve/disapprove the following delinquent Water Basin Accounts to be charged back to the State of Nevada: a) 2008-09 Water Basin Accounts; b) 2009-10 Water Basin Accounts; and c) 2010-11 Water Basin Accounts; and other matters properly relating thereto.

Public comment.

*(5) Discuss and approve/disapprove the following adjustments, refunds, to the roll: a) adjustment to the 2009-10 secured roll; b) adjustment to the 2010-11 secured roll and refunds; and c) adjustment to the 2010-11 unsecured roll; and other matters properly relating thereto.

Public comment.

*(6) Discuss and approve/disapprove the following transfers of delinquent water/sewer accounts to the 2010-11 secured tax roll: a) transfers according to Ordinance No. 2009-13 – Battle Mountain Water and Sewer; and b) transfers according to Ordinance No. 2009-14 – Water and Sewer District #2; and other matters properly relating thereto.

Public comment.

*(7) Discuss and approve/disapprove payment for delinquent water and sewer accounts for 2010-11: a) to pay accounts according to Ordinance No. 2009-13 – Battle Mountain; and b) to pay accounts according to Ordinance No. 2009-14 – Austin Water and Sewer #2; and other matters properly relating thereto.

Public comment.

*(8) Discussion and possible action regarding the proper use of the County Federal Tax ID# and other matters properly relating thereto.

Public comment.

*(9) Discuss and approve/disapprove the following payments for 2011 Estimated Net Proceeds received in June 2011: a) the Lander County School District; and b) the Lander County Hospital District; and other matters properly relating thereto.

Public comment.

SHERIFF

*(10) Discussion and possible action regarding supplemental funding beginning July 1, 2011 for TRIDENT Task Force position in the Lander County Sheriff's Office and other matters properly relating thereto.

Public comment.

*(11) Discussion and possible action regarding revised Intrastate Interlocal Contract between Lander County Sheriff and the State of Nevada Department of Information Technology for rack rental space in the Austin Summit DoIT site and other matters properly relating thereto.

Public comment.

EXECUTIVE DIRECTOR

*(12) Discussion and possible action regarding funding for Battle Mountain 3rd and 4th of July events and other matters properly relating thereto.

Public comment.

ADJOURN

*Denotes discussion and action item with information provided at the meeting. Action may be taken according to the "Nevada Open Meeting Law Manual" via a telephone conference call in which a quorum of the board members is simultaneously linked to one another telephonically. Members of the public may appear at the Battle Mountain, Nevada, Commissioner Meeting Room or Austin Courtroom in Austin, Nevada, to listen or participate in this meeting.

NOTE: TIMES ARE APPROXIMATE

This is the tentative schedule for the meeting. The Commissioners reserve the right to take items out of order to accomplish business in the most efficient manner.

Notice to persons with disabilities: Members of the public who are disabled and require special assistance or accommodations at the meeting are requested to notify the County Clerk in writing at the Courthouse, 315 S. Humboldt Street, Battle Mountain, Nevada 89820, or call (775) 635-5738 at least one day in advance of the meeting.

AFFIDAVIT OF POSTING

State of Nevada)
) ss.
County of Lander)

Molly Gonzalez, Deputy Clerk, of said Lander County, Nevada, being duly sworn, says, that on the 22nd day of June A.D., 2011, she posted a notice, of which the attached is a copy, at the following places: 1) Battle Mountain Civic Center, 2) Battle Mountain Post Office, 3) Lander County Courthouse and 4) Swackhamer's Plaza Bulletin Board, in said Lander County, where proceedings are pending.

Molly Gonzalez, DEPUTY CLERK Molly Gonzalez

Subscribed and sworn to before me this 22nd day of June 2011.

WITNESS Cathy Myers

Payment of Bills

June 28, 2011

ROGENE HILL
Lander County Finance Director

ACKNOWLEDGEMENT OF REVIEW & AUTHORIZATION — DATE

Chairman _____ _____

Commissioner _____ _____

Commissioner _____ _____

Commissioner _____ _____

Commissioner _____ _____

LANDER COUNTY COMMISSION MEETING

June 28th, 2011

APPROVE / DISAPPROVE
SUBMITTED EXPENDITURES IN THE AMOUNT OF $94,841.79
From Check #37166 thru#37197

315 South Humboldt Street ⋖ ⋗ Battle Mountain NV 89820
Phone: (775) 635-2885 ⋖ ⋗ Fax: (775) 635-5332

CHECK NUMBER	VENDOR	INVOICE DESCRIPTION	P/O #	DATE	TRANS#	AMOUNT	CHECK TOTAL
37166	A G TELEPHONE SYSTEMS						
		06/9/11/FAX LINE CLERK		6/28/11	66496	84.00	
							84.00
37167	B M AUTO SUPPLY,INC						
		04/04/11/EPOXY/R&B		6/28/11	66521	29.85	
		04/05/11/GASKET/R&B		6/28/11	66521	5.76	
		04/13/11/ACETELYN/R&B		6/28/11	66521	13.91	
		05/05/11/SCEW DRVR/SEWER		6/28/11	66521	20.25	
		05/17/11/TIE DWNS/SEWER		6/28/11	66521	24.89	
		05/23/11/UTILITY CAPS W&S		6/28/11	66521	27.98	
							122.64
37168	BASALITE CONCRETE PRODUCT						
		06/16/11/BLKTOPPATCH/R&B		6/28/11	66522	2,411.00	
							2,411.00
37169	BOSS TANKS, INC.						
		06/11/11 COVERTS/R&B		6/28/11	66523	8,859.00	
							8,859.00
37170	BYRON ALARCON						
		05/19/11/WEB MAINT/LC.ORG		6/28/11	66510	315.00	
							315.00
37171	CAMPBELL TRACTOR CO						
		06/10/11/PRTSMOWER/GLF CR		6/28/11	66524	129.71	
							129.71
37172	CBA LIGHTING & CONTROLS						
		06/10/11/LAMPS AUST AIRPO		6/28/11	66520	199.80	
							199.80
37173	DAVID J. CORMANY						
		06/15/11/380JILLIAN/PLANS		6/28/11	66514	519.84	
		06/17/11 POSTAGE		6/28/11	66514	5.55	
							525.39
37174	CROP PRODUCTION SERVICES,						
		04/29/11/STA-PUT MOSQ CTL		6/28/11	66513	393.70	
							393.70
37175	DELONG FORD MERCURY, INC.						
		06/03/11/PARTS AMBUL		6/28/11	66515	69.18	
							69.18
37176	EMERGENCY MEDICAL PROD,						
		06/07/11/SUPPLIES AMBUL		6/28/11	66516	370.24	
							370.24
37177	EMRB						
		06/09/11/EMRB/BMVFD		6/28/11	66497	131.25	
							131.25
37178	GENE P ETCHEVERREY						
		06/13/11 140X.51 ELKO EMS		6/28/11	66498	71.40	
							71.40
37179	R SUPPLY #3210						
		06/13/11/BRUSHES/SEWER		6/28/11	66525	475.37	
		0/13/11/INS STIFFNER/SEW		6/28/11	66525	64.08	
							539.45
37180	ROBIN D. GRAY						
		6/17/11 BITING FLY WORK		6/28/11	66499	4,762.50	
							4,762.50
37181	HIGH DESERT ENGINEERING						
		06/13/11/PRO SURVEY/AUSTI		6/28/11	66500	420.00	
							420.00
37182	HUMBOLDT COUNTY YOUTH						

CHECK NUMBER	VENDOR	INVOICE DESCRIPTION	P/O #	DATE	TRANS#	AMOUNT	CHECK TOTAL
		06/17/11 US FEES		6/28/11	66501	57.00	
							57.00
37183	INLAND SUPPLY CO INC						
		06/15/11/SUPPLIES/POOL		6/28/11	66526	166.45	
							166.45
37184	J-U-B ENGINEERS, INC.						
		AUSTIN PROJ 83-10-041		6/28/11	66519	2,850.24	
		BMAPRON RECONST 83-10-042		6/28/11	66519	32,385.23	
							35,235.47
37185	L N CURTIS & SONS						
		06/16/11/THERMAL IMAGER		6/28/11	66502	11,500.00	
							11,500.00
37186	BART E. NEGRO						
		06/14/11 LADDER/VFD		6/28/11	66509	369.00	
							369.00
37187	PAIR NETWORKS, INC.						
		06/2/11/NETWORK ASSESSOR		6/28/11	66503	43.55	
							43.55
37188	PC INTERNET						
		06/15/11INTERNET/SPLIT		6/28/11	66527	13.33	
		06/15/11INTERNET/SPLIT		6/28/11	66527	13.33	
		06/15/11INTERNET/SPLIT		6/28/11	66527	13.33	
							39.99
37189	QUILL CORP						
		05/10/11/ADOBE UPGRD/ASSE		6/28/11	66504	199.99	
		06/10/11/KOPY AID HR		6/28/11	66504	39.99	
		06/09/11/H N SUPPLIES		6/28/11	66504	151.00	
		06/10/11/J CRT SUPPLIES		6/28/11	66504	164.04	
		06/10/11/J CRT SUPPLIES		6/28/11	66504	283.83	
		06/10/11/J CRT SUPPLIES		6/28/11	66504	434.82	
		06/10/11 J CRT SUPPLIES		6/28/11	66504	171.46	
		06/13/11/J CRT SUPPLIES		6/28/11	66504	51.96	
							1,497.09
37190	ROYAL HARDWARE						
		05/14/11/CHAIN/AMBUL		6/28/11	66517	21.92	
		05/17/11/GLUE/KEYS/PAINT		6/28/11	66517	15.93	
		05/21/11/TAPE/AMBUL		6/28/11	66517	29.96	
		05/24/11/DURACEL/ASSESSOR		6/28/11	66505	10.98	
		5/25/11/SHELVING/AMBUL		6/28/11	66517	95.82	
							174.61
37191	ZOIE M. WILLIAMS						
		06/07/11 TRANSCRIPT		6/28/11	66506	148.80	
		5/11-6/9/11/TRANSCRIPTS		6/28/11	66506	208.30	
							357.10
37192	STANTEC CONSULTING						
		06/21/11 PROF SERV. #1		6/28/11	66518	23,287.32	
							23,287.32
37193	JAY R. FISCHER						
		06/21/11/TOKENS/SEWER		6/28/11	66528	100.00	
							100.00
37194	TETRA TECH, IN.						
		06/06/11 PRO SERV/WTRPRMT		6/28/11	66507	486.00	
							486.00
37195	TIRE FACTORY						
		06/10/11/JUSTICE CRT		6/28/11	66511	39.95	
							39.95

CHECK NUMBER	VENDOR	INVOICE DESCRIPTION	P/O #	DATE	TRANS#	AMOUNT	CHECK TOTAL
37196	UNION PACIFIC RAILROAD						
		06/08/11/PARK LEASE RENT		6/28/11	66508	500.00	
							500.00
37197	WESTERN NEVADA SUPPLY CO						
		06/22/11/FCNOZZELS/GLFCRS		6/28/11	66529	1,320.00	
		06/22/11/FCNOZZELS/GLFCRS		6/28/11	66529	264.00	
							1,584.00
	CHECKS TOTAL						94,841.79

COMPUTERLAND OF RENO

COUNTY OF LANDER

DATE	INVOICE	AMOUNT	REMARKS
06/21/11	RNZ0057939	2,930.89	05/09/11/CISCO ROUTERS
06/21/11	RNZ0057959	68.00	05/11/11/SMARTNET SERVC
06/21/11	RNZ0057963	1,236.00	05/12/11/ELITE 8200 COMP
06/21/11	RNZ0057964	138.00	05/12/11/SMARTNET REPLAC
06/21/11	RNZ0057981	218.00	05/16/11/QUICKBKS/INTUIT
06/21/11	RNZ0058001 PARTS	77.87	05/18/11 HP4GB DDR3-133
06/21/11	RNZ0058063	2,189.00	06/03/11/HP8200AUSTIN JC

CHECK NO 37141 $6,857.76 **

COUNTY OF LANDER
315 SOUTH HUMBOLDT STREET
BATTLE MOUNTAIN, NV 89820
(775) 635-2573

WELLS FARGO BANK
BATTLE MOUNTAIN, NV 89820
GENERAL ACCOUNT

No. 037141

94-7074
3212

VOID IF NOT CASHED WITHIN 90 DAYS

PAY TO THE ORDER OF

COMPUTERLAND OF RENO

DATE	CHECK NO.	AMOUNT
06/23/11 **VOID**	37141 **VOID**	$6,857.76 **VOID**

VOID******6,857DOLLARS AND76CENTS***

COMPUTERLAND OF RENO
P.O. BOX 10560

RENO NV 89510-0560

VOID

NON-NEGOTIABLE

LANDER COUNTY VOUCHER

Pay To: **ComputerLand Reno**
Address 1315 Greg St.
Sparks,Nv 89431

VENDOR #	**08160**
FUND	0
DEPT	000
EXPENSE	0

Invoice#	Invoice Description	Dept #	Expense Acct #	Amount
RNZ0057963	HP ELITE 8200/MONITOR	300-068	53991	$ 1,236.00
RNZ0057981	INTUIT QUICKBOOKS 2011	300-068-	53920	$ 218.00
RNZ0058063	HP ELITE 8200/MONITOR (2)	300-068-	53991	$ 2,189.00
RNZ0057939	CISCO ROUTERS	300-068	53991	$ 2,930.89
RNZ0057959	SMARTNET SERVICE AGR	300-068-	53920	$ 68.00
RNZ0057964	SMARTNET SERVICE / REPACEMENT-2	300-068-	53920	$ 138.00
RNZ0058001	HP 4GB DDR3-133 SODIMM	001-006	53920	$ 77.87
			TOTAL	**$6,857.76**

I certify that the foregoing claim is correct and just; that the articles specified have been received by the proper officials of the County, the Courts and/or Special Districts, or the services stated have been performed; and that they were necessary for, have been or will be applied to County, Court or Special District purposes.

Authorized Signature

COUNTY COMMISSION APPROVAL

Chairman

208160

PURCHASE ORDER

162-99

Lander County Assessor
315 S. Humboldt Street
Battle Mountain, Nevada 89820
(775) 635-2610

DATE: 05/11/2011

P.O. # 10064

TO: Mike Zook
ComputerLand - Reno
1315 Greg Street
Sparks, NV 89431
775-689-8430 (ext. 111)

SHIP TO: Lura Duvall
Lander County Assessor
315 S. Humboldt Street
Battle Mountain, NV 89820

Bill To: Lander County Assessor

Quantity	Description	Amount
1	HP Elite 8200 Computer + Accessories	1,484.00
1	Freight	19.00
	(See attached Quote # RN-182502)	
	(Water & Sewer Dept)	
		1454.00
	Total	~~1,503.00~~

Charge to Account # 300-068-53920

Vender #

APPROVED:

Lura Duvall

Elected Official or County Manager Signature

COMPUTERLAND RENO

P.O. Box 10560

RENO NV 89510
(775)689-8420

RECEIVED
MAY 16 2011
LANDER COUNTY ASSESSOR

Date 05/12/11

Sales Invoice
RNZ0057963 Page 1
PO # LURA DUVALL

Served by : Mike Zook

Payment Method		
CHARGE	1236.00	LURA DUVALL

NET 20 DAYS

SOLD TO: 8906
LANDER COUNTY ASSESSOR
315 S. HUMBOLDT ST
BATTLE MOUNTAIN, NV 89820

SHIP TO:
LANDER COUNTY ASSESSOR
315 S. HUMBOLDT ST

BATTLE MOUNTAIN, NV 89820

QTY.	PART	Description	Unit Price	Extended Price
1	HPCD-A7890	HP ELITE 8200 USDR 3.1GHZ/2GB/250 LSerial Number = MXL1141N8C	709.00	709.00
1	HPCD-C0571	HP LE2201W 22" WIDE LCD MONITOR LSerial Number = CNK1111RHN	179.00	179.00
1	MSFT-P2010PMS	OFFICE 2010 PRO ATTACH KEY	329.00	329.00

YOUR PAYMENT IS DUE AT
COMPUTERLAND OF RENO
P.O. BOX 10560
RENO, NV 89510-0560
NO LATER THAN
6-1-11

300-068-53991

COMPUTERLAND · RENO
P.O. Box 10560

RENO NV 89510
(775)689-8420

Date 05/16/11

Sales Invoice
RNZ0057981 Page 1
PO # LURA DUVALL

Served by : Mike Zook

SOLD TO: 8906
LANDER COUNTY ASSESSOR
315 S. HUMBOLDT ST
BATTLE MOUNTAIN, NV 89820

-------- Payment Method --------
CHARGE 218.00 LURA DUVALL

NET 20 DAYS

SHIP TO:
LANDER COUNTY ASSESSOR
315 S. HUMBOLDT ST

BATTLE MOUNTAIN, NV 89820

QTY.	PART	Description	Unit Price	Extended Price
1	INTU-P3617	INTUIT QUICKBOOKS 2011 PRO	199.00	199.00

YOUR PAYMENT IS DUE AT
COMPUTERLAND OF RENO
P.O. BOX 10560
RENO, NV 89510-0560
NO LATER THAN
6-5-11

<<< PRICE QUOTATION >>>

COMPUTERLAND RENO
P.O. Box 10560
RENO, NV 89510-
(775)689-8420

For: LURA DUVALL
LANDER COUNTY ASSESSOR
315 S. HUMBOLDT ST

BATTLE MOUNTAIN, NV 89820
(775)635-2610

Date: 05/10/11
Quote : RN-182502
Page : 1
PO No : HP USDT
Prepared by: Mike Zook

Qty	Stock Number	Description	Unit Price	Amount
1	*TDAT-53016Z	HP ELITE 8200 USDT 3.1GHZ, 2GB,250G	709.00	709.00
1	*SYNN-2584543	HP 4GB DDR3-1333 SODIMM	68.00	68.00
1	HPCD-C0571	HP LE2201W 22" WIDE LCD MONITOR	179.00	179.00
1	MSFT-P2010P	MS OFFICE 2010 PRO ATTACH KEY	329.00	329.00
1	INTU-P3617	INTUIT QUICKBOOKS 2011 PRO	199.00	199.00

2081160

PURCHASE ORDER

Lander County Assessor
315 S. Humboldt Street
Battle Mountain, Nevada 89820
(775) 635-2610

DATE: 05/11/2011

P.O. # 10121

TO: Mike Zook
ComputerLand - Reno
1315 Greg Street
Sparks, NV 89431
775-689-8430 (ext. 111)

SHIP TO: Lura Duvall
Lander County Assessor
315 S. Humboldt Street
Battle Mountain, NV 89820

Bill To: Lander County Assessor

Quantity	Description	Amount
2	HP Elite 8200 Computer + Accessories	2,174.00
1	Freight	15.00
	(See attached Invoice #RNZ0058063)	
	(Austin Justice Court)	
	Total	**2,189.00**

Charge to Account # 300-068-53991

Vender # 2081160

APPROVED: Lura Duvall
Elected Official or County Manager Signature

COMPUTERLAND RENO
P.O. Box 10560

RENO NV 89510
(775)689-8420

RECEIVED
JUN 08 2011
LANDER COUNTY ASSESSOR

Date 06/03/11

Sales Invoice
RNZ0058063 Page 1
PO # LURA DUVALL

-------- Payment Method --------
CHARGE 2189.00 LURA DUVALL

Served by : Mike Zook

NET 20 DAYS

SOLD TO: 8906
LANDER COUNTY ASSESSOR
315 S. HUMBOLDT ST
BATTLE MOUNTAIN, NV 89820

SHIP TO:
LANDER COUNTY ASSESSOR
315 S. HUMBOLDT ST

BATTLE MOUNTAIN, NV 89820

QTY.	PART	Description	Unit Price	Extended Price
2	HPCD-A7890	HP ELITE 8200 USDR 3.1GHZ/2GB/250	729.00	1458.00
		Serial Number = S2UA1210MN7		
		Serial Number = S2UA1210MN8		
2	HPCD-C0571	HP LE2201W 22" WIDE LCD MONITOR	179.00	358.00
		Serial Number = CNK1091SQ2		
		Serial Number = CNK1091SR6		
2	MSFT-P2010BMS	OFFICE 2010 BUS/HOME ATTACH KE	179.00	358.00

YOUR PAYMENT IS DUE AT
COMPUTERLAND OF RENO
P.O. BOX 10560
RENO, NV 89510-0560
NO LATER THAN
6-23-11

PURCHASE ORDER

Lander County Assessor
315 S. Humboldt Street
Battle Mountain, Nevada 89820
(775) 635-2610

DATE: 05/09/2011

P.O. # 10122

TO: Mike Zook
ComputerLand - Reno
1315 Greg Street
Sparks, NV 89431
775-689-8430 (ext. 111)

SHIP TO: Lura Duvall
Lander County Assessor
315 S. Humboldt Street
Battle Mountain, NV 89820

Bill To: Lander County Assessor

Quantity	Description	Amount
2	Cisco Routers	2,918.00
1	Freight	12.89
	(Main computer system)	
	Total	**2,930.89**

Charge to Account # 300-068-53991

Vender # 2081160

APPROVED:

Lura Duvall

Elected Official or County Manager Signature

COMPUTERLAND RENO
P.O. Box 10560

RENO NV 89510
(775)689-8420

RECEIVED
MAY 12 2011
LANDER COUNTY ASSESSOR

Date 05/09/11

Sales Invoice
RNZ0057939 Page 1
PO # LURA DUVALL

Payment Method
CHARGE 2930.89 LURA DUVALL

Served by : Mike Zook

NET 20 DAYS

SOLD TO: 8906
LANDER COUNTY ASSESSOR
315 S. HUMBOLDT ST
BATTLE MOUNTAIN, NV 89820

SHIP TO:
LANDER COUNTY ASSESSOR
315 S. HUMBOLDT ST

BATTLE MOUNTAIN, NV 89820

QTY.	PART	Description	Unit Price	Extended Price
2	CISC-K1921	CISCO 1921 ROUTER BND SEC T1	1459.00	2918.00

YOUR PAYMENT IS DUE AT
COMPUTERLAND OF RENO
P.O. BOX 10560
RENO, NV 89510-0560
NO LATER THAN
5-29-11

LD 300-068-5399

COMPUTERLAND RENO
P.O. Box 10560
RENO NV 89510
(775)689-8420

RECEIVED
MAY 12 2011
LANDER COUNTY ASSESSOR

Date 05/09/11

Sales Invoice
RNZ0057939 Page 1
PO # LURA DUVALL

Payment Method
CHARGE 2930.89 LURA DUVALL

Served by : Mike Zook

NET 20 DAYS

SOLD TO: 8906
LANDER COUNTY ASSESSOR
315 S. HUMBOLDT ST
BATTLE MOUNTAIN, NV 89820

SHIP TO:
LANDER COUNTY ASSESSOR
315 S. HUMBOLDT ST

BATTLE MOUNTAIN, NV 89820

QTY.	PART	Description	Unit Price	Extended Price
2	CISC-K1921	CISCO 1921 ROUTER BND SEC T1	1459.00	2918.00

YOUR PAYMENT IS DUE AT
COMPUTERLAND OF RENO
P.O. BOX 10560
RENO, NV 89510-0560
NO LATER THAN
5-29-11

LD. 300-068-5399

208160

COMPUTERLAND RENO

P.O. Box 10560

RENO NV 89510
(775)689-8420

Date 05/11/11

Sales Invoice
RNZ0057959 Page 1
PO # LURA DUVALL

Served by : Mike Zook

SOLD TO: 8906
LANDER COUNTY ASSESSOR
315 S. HUMBOLDT ST
BATTLE MOUNTAIN, NV 89820

Payment Method
CHARGE 68.00 LURA DUVALL

NET 20 DAYS

SHIP TO:
LANDER COUNTY ASSESSOR
315 S. HUMBOLDT ST

BATTLE MOUNTAIN, NV 89820

QTY.	PART	Description	Unit Price	Extended Price
1	CISC-S0590	SMARTNET 8X5XNBD EXT. SERVICE AGR	68.00	68.00
		Serial Number = 91567156		

RECEIVED
JUN 21 2011
L.C. FINANCE

YOUR PAYMENT IS DUE AT
COMPUTERLAND OF RENO
P.O. BOX 10560
RENO, NV 89510-0560
NO LATER THAN
5-31-11

LD 300-068-53920

COMPUTERLAND RENO

P.O. Box 10560

RENO NV 89510
(775)689-8420

Date 05/12/11

Sales Invoice
RNZ0057964 Page 1
PO # LURA DUVALL

-------- Payment Method --------
CHARGE 138.00 LURA DUVALL

Served by : Mike Zook

NET 20 DAYS

SOLD TO: 8906
LANDER COUNTY ASSESSOR
315 S. HUMBOLDT ST
BATTLE MOUNTAIN, NV 89820

SHIP TO:
LANDER COUNTY ASSESSOR
315 S. HUMBOLDT ST

BATTLE MOUNTAIN, NV 89820

QTY.	PART	Description	Unit Price	Extended Price
2	CISC-SS211	SMARTNET NBD REPLACEMENT 1921 8X5	69.00	138.00

RECEIVED
JUN 21 2011
L.C. FINANCE

YOUR PAYMENT IS DUE AT
COMPUTERLAND OF RENO
P.O. BOX 10560
RENO, NV 89510-0560
NO LATER THAN
6-1-11

COMPUTERLAND RENO
P.O. Box 10560

RENO NV 89510
(775)689-8420

RECEIVED
MAY 24 2011
LANDER COUNTY ASSESSOR

Date 05/18/11

Sales Invoice
RNZ0058001 Page 1
PO # LURA DUVALL

-------- Payment Method --------
CHARGE 77.87 LURA DUVALL

Served by : Mike Zook

NET 20 DAYS

SOLD TO: 8906
LANDER COUNTY ASSESSOR
315 S. HUMBOLDT ST
BATTLE MOUNTAIN, NV 89820

SHIP TO:
LANDER COUNTY ASSESSOR
315 S. HUMBOLDT ST

BATTLE MOUNTAIN, NV 89820

QTY.	PART	Description	Unit Price	Extended Price
1	HPCD-B0641	HP 4GB DDR3-133 SODIMM	68.00	68.00

RECEIVED
JUN 21 2011
L.C. FINANCE

YOUR PAYMENT IS DUE AT
COMPUTERLAND OF RENO
P.O. BOX 10560
RENO, NV 89510-0560
NO LATER THAN
6-7-11

LA 001-016-53920

ESRI, INC.

COUNTY OF LANDER

DATE	INVOICE	AMOUNT	REMARKS
06/21/11	92326840/312438	1,800.00	04/19/11/ARCVIEW UPGRD

CHECK NO 37142 $1,800.00 **

COUNTY OF LANDER

315 SOUTH HUMBOLDT STREET
BATTLE MOUNTAIN, NV 89820
(775) 635-2573

PAY TO THE ORDER OF

ESRI, INC.

VOID******1,800DOLLARS AND00CENTS***

ESRI, INC.
380 NEW YORK STREET

REDLANDS CA 92373

WELLS FARGO BANK
BATTLE MOUNTAIN, NV 89820
GENERAL ACCOUNT

No. 037142

94-7074
3212

VOID IF NOT CASHED WITHIN 90 DAYS

DATE	CHECK NO.	AMOUNT
06/23/11 **VOID**	37142 **VOID**	$1,800.00 **VOID**

Void

NON-NEGOTIABLE

3392-10264-99

PURCHASE ORDER

County of Lander
315 S. Humboldt Street
Battle Mountain, Nevada 89820
(775) 635-2573

DATE: April 19, 2011

P.O. # 10033

TO:
ESRI, Inc
380 New York Street
Redlands, CA 92373
Phone: 800-447-9778 Ext. 2376
Attn: Ajmal Yourish
Fax: 909-307-3083

SHIP TO:
Lander County Assessor
315 S. Humboldt Street
Battle Mountain, NV 89820
775-635-2610
Attn: Lura Duvall
Customer# 312438

Quantity	Description	Amount
1	Upgrade to ArcView Concurrent	1800.00
	Quotation# 20385118	
	Customer : #312438	
	Tax Exempt #88-6000093	
	Assessor Technology Fund	
	Total	**$1,800.00**

Charge to Account # 300-68-53920

APPROVED: Lura Duvall

esri®

Invoice	:	92326840	Document date	: 04/19/2011
Or	:	2361954	Delivery	: 8147911
Customer	:	312438	Contract	: 2008MPA195
Customer PO	:	10033		
P.O. Date	:	04/19/2011		
End User	:	312438	COUNTY OF LANDER	
Project	:			

Phone: (909)793-2853

Invoice

Page : 1

Bill to:
Lura Duvall
COUNTY OF LANDER
ASSESSOR OFFICE
315 S HUMBOLDT ST
BATTLE MOUNTAIN NV 89820

Ship to:
Lura Duvall
COUNTY OF LANDER
ASSESSOR OFFICE
315 S HUMBOLDT ST
BATTLE MOUNTAIN NV 89820

RECEIVED
APR 25 2011
LANDER COUNTY ASSESSOR

For questions regarding this document, please contact Customer Service at 888-377-4575.
Terms of payment: Net Due 30 days, no discount

Item	Qty	Material Number	Price
1000	1	86609 ArcView Concurrent Use Upgrade from ArcView Single Use	1,800.00
1010	1	87143 ArcView Concurrent Use License	

Items total		1,800.00
Subtotal		1,800.00
Total:	**$**	**1,800.00**

P.O. # 10033

FEIN: 95-2775732
DUNS/CEC: 06-313-4175 CAGE: 0AMS3

please detach lower portion and return with remittance

esri®

Invoice	:	92326839	Document date	: 04/19/2011
Or	:	2361954	Delivery	:
Customer	:	312438	Contract	: 2008MPA195
Customer PO	:	10033		
P.O. Date	:	04/19/2011		
End User	:	312438	COUNTY OF LANDER	
Project	:			

Phone: (909)793-2853

Invoice

Page : 1

Bill to:
Lura Duvall
COUNTY OF LANDER
ASSESSOR OFFICE
315 S HUMBOLDT ST
BATTLE MOUNTAIN NV 89820

RECEIVED
APR 25 2011
LANDER COUNTY ASSESSOR

Ship to:
Lura Duvall
COUNTY OF LANDER
ASSESSOR OFFICE
315 S HUMBOLDT ST
BATTLE MOUNTAIN NV 89820

For questions regarding this document, please contact Customer Service at 888-377-4575.
Terms of payment: Net Due 30 days, no discount

Item	Qty	Material Number	Price
1020	1	93198 ArcView Single Use License	
		Total:	**$ 0.00**

P.O. # 10033

FEIN: 95-2775732
DUNS/CEC: 06-313-4175 CAGE: 0AMS3

please detach lower portion and return with remittance

Remit by Check:

Electronic Instructions:

esri

ENVIRONMENTAL SYSTEMS RESEARCH INSTITUTE, INC.
380 New York St
Redlands, CA 92373-8100
Phone: (909) 793-2853 Fax: 909-307-3049
DUNS Number: 06-313-4175 CAGE Code: 0AMS3

To expedite your order, please attach a copy of this quotation to your purchase order.
Quote is valid from: 04/19/2011 To: 07/18/2011

Quotation # 20385118

Date: April 19, 2011

Customer # 312438 Contract # 2008MPA1958

COUNTY OF LANDER
ASSESSOR OFFICE
315 S HUMBOLDT ST
BATTLE MOUNTAIN, NV 89820

ATTENTION: Lura Duvall
PHONE: (775) 635-2610
FAX: 775-635-5520

Material	Qty	Description	Unit Price	Total
86609	1	ArcView Concurrent Use Upgrade from ArcView Single Use	1,800.00	1,800.00
			Item Total:	1,800.00
			Subtotal:	1,800.00
			Sales Tax:	0.00
			Estimated Shipping & Handling(2 Day Delivery) :	0.00
			Contract Pricing Adjust:	0.00
			Total:	$1,800.00

This quote is subject to the terms and conditions of the Clark County Master Purchase Agreement # 2008MPA1958.

RECEIVED
APR 1 9

ESRI QUOTATION TERMS AND CONDITIONS

Esri, 380 New York St., Redlands, CA 92373-8100 USA • TEL 909-793-2853 • FAX 909-793-5953

All quotations are valid for ninety (90) days unless otherwise stated on the quotation form. These prices and terms are valid only for items purchased for use and delivery within the United States.

This quotation information is proprietary and may not be copied or released other than for the express purpose of the current system selection and purchase. This information may not be given to outside parties or used for any other purpose without written consent from Environmental Systems Research Institute, Inc. (Esri).

To expedite your order, please reference the quotation number on your purchase order.

ORDER PROCESS

The order process is initiated when Esri receives an original purchase order or some form of advance payment. Several additional documents (e.g., Master License Agreement, credit application, Tax Exemption Certificate, etc.) may be required to complete the order process. Generally, the need for these documents varies by the type of software, data, Web-enabled services, subscriptions, professional services or other products ordered, which is determined upon receipt of the purchase order (or advance payment). If delivery must be expedited, please contact your marketing representative for assistance.

IMPORTANT! Collectively, these documents contain the authorizations and information necessary to ship proper versions of the software or data on the correct media, or to initiate Web-enabled services, subscriptions, or professional services. Please return them promptly to avoid unnecessary delays in shipping or delivery. Please return all documents to Esri Customer Service, or as otherwise directed.

Please show the following remittance address on your purchase order:

Esri, File No. 54630, Los Angeles, CA 90074-4630

ESRI LICENSE AGREEMENTS

All Esri software, data, Web-enabled services, and subscriptions offered in this quotation are commercial off-the-shelf items developed at private expense and subject to Esri commercial license terms. You may have a signed license agreement on file that covers this order. If so, please reference the license agreement number on your purchase order. Unless a signed license is on file with Esri, Esri software, data, Web-enabled services and subscriptions are subject to the Esri License Agreement included with the deliverable item as an on-line or click-through agreement. A copy is enclosed. Certain software or data requires a Master License Agreement signed by both parties. Professional services agreements may also include license terms.

Some Esri software is copy protected with a software keycode or hardware key, and some software, data, Web-enabled services or subscriptions require registration or a password. You will be given instructions to access the keycode, register, or obtain a password through the Esri Web site or by other means.

MAINTENANCE

After expiration of any complimentary period of maintenance that may apply to the licensed software, Esri will quote maintenance payable annually in advance. A reinstatement fee applies when maintenance has lapsed.

OPTIONAL MULTI-YEAR MAINTENANCE

For software and data with optional multiyear maintenance for a discounted fee, the discounted maintenance fees are in consideration of, and contingent upon, your commitment to the maintenance term you elect in your order. For such multiyear maintenance, you may cancel the maintenance upon ninety (90) days advanced written notice to Esri Customer Service,

Option 2. If you are purchasing a product with multi-year maintenance terms and are issuing the purchase order for the first year only, please include the following information on your purchase order (PO): **"This PO is in acceptance of quote #_____. This order is for the initial year of the multi-year maintenance term. We agree to issue a PO for each subsequent year in a pro rata amount per year to be invoiced annually in advance."**

Option 3: If you are purchasing a product with multi-year maintenance terms and are issuing the purchase order for all years upfront but want to be invoiced annually, please include the following information on your purchase order: **"This PO is in acceptance of quote #_____ and covers the total amount for all years included in the multi-year maintenance term. However, Esri shall invoice annually in advance a pro rata amount for each year of the term."**

DATA AND WEB SERVICES DISCLAIMER
Data and Web Services may contain some nonconformities, defects, errors, or omissions. THE DATA AND WEB SERVICES ARE PROVIDED "AS-IS" WITHOUT WARRANTY OF ANY KIND. Without limiting the generality of the preceding sentence, Esri and its licensors do not warrant that the data and Web Services will meet Licensee's needs or expectations, that the use of the data or web services will be uninterrupted, or that all nonconformities can or will be corrected. Esri and its licensors are not inviting reliance on this data or Web Services, and Licensee should always verify actual data or Web Services.

DELIVERY
FOB Redlands, CA, USA

Software: Allow thirty (30) days from Esri's receipt of purchase order, signed Software License Agreement(s), and other documents, as required.

Hardware: Manufacturer's terms apply. Lead times depend on make/models purchased.

Note: Standard delivery method is ground or two-day air for software and surface carrier for hardware. Actual delivery method may vary depending on weight. Other service is available for an additional fee (e.g., overnight delivery).

PAYMENT TERMS
Net thirty (30) days, on approved credit. Orders less than $800 require prepayment by check or credit card unless your organization is a government agency, university, college, or Fortune 500 company.

TAXES
This quote includes applicable sales or use taxes for the prices quoted as required by law. The tax amount may change depending on the time lapse between this quote and your order to us. Esri will include applicable sales or use taxes on your invoice unless you provide proof with your order that your organization or use of the product is tax exempt.

PATRICK R WOTRUBA

COUNTY OF LANDER
DBA:GEO GRAPHICS

DATE	INVOICE	AMOUNT	REMARKS
06/21/11	253	2,748.00	06/05/11 AUTOCAD/GIS UPDT

CHECK NO 37144 $2,748.00 **

COUNTY OF LANDER

315 SOUTH HUMBOLDT STREET
BATTLE MOUNTAIN, NV 89820
(775) 635-2573

WELLS FARGO BANK
BATTLE MOUNTAIN, NV 89820
GENERAL ACCOUNT

No. 037144

94-7074
3212

VOID IF NOT CASHED WITHIN 90 DAYS

PAY TO THE ORDER OF

PATRICK R WOTRUBA

DATE	CHECK NO.	AMOUNT
06/23/11 **VOID**	37144 **VOID**	$2,748.00 **VOID**

VOID******2,748DOLLARS AND00CENTS***

PATRICK R WOTRUBA
P.O. BOX 22791
1140 W LEON DR.
LINCOLN NE 68542-2791

DBA:GEO GRAPHICS

VOID

NON-NEGOTIABLE

V-5203-10260-99

PURCHASE ORDER

County of Lander
315 S. Humboldt Street
Battle Mountain, Nevada 89820
(775) 635-2573

DATE: 06/05/2011

P.O. # 10120

TO: Geo-Graphics
P O Box 22791
Lincoln, NE 68542
402-476-6247

SHIP TO: Lander County Assessor
315 S. Humboldt Street
Battle Mountain, NV 89820
(775) 635-2610
Attn: Lura Duvall

Quantity	Description	Amount
1	Mapping Fees (See attached invoice)	$2,748.00
	Total	$2,748.00

Charge to Account # 001-006-53600

Vender # 5203

APPROVED: Lura Duvall
Elected Official or County Manager Signature

Geo-Graphics GG

PO Box 22791
Lincoln, NE 68542
Phone: 402-476-6247
e-mail: landmap@aol.com

Invoice

DATE	INVOICE #
6/5/2011	253

BILL TO	SHIP TO
Lander County Assessor 315 S. Humboldt St. Battle Mountain, NV 89820	

DUE DATE	P.O. NUMBER
7/5/2011	

ITEM	DESCRIPTION	QTY	RATE	AMOUNT
Computer Time	AutoCad Drafting and GIS updates: Austin Index and Flood Plain Index, 01-07, 01-11, 2-22, 5-44, 5-50, 7-52, 11-06, Book 2 Index, 4 CD's, 4 DVD's	42.5	60.00	2,550.00
Plotting 2BV	11"x17" bond prints	24	7.00	168.00
Shipping & Handling	2 boxes	1		30.00

PURCHASE ORDER

County of Lander
315 S. Humboldt Street
Battle Mountain, Nevada 89820
(775) 635-2573

DATE: 06/05/2011

P.O. # 10120

TO: Geo-Graphics
P O Box 22791
Lincoln, NE 68542
402-476-6247

SHIP TO: Lander County Assessor
315 S. Humboldt Street
Battle Mountain, NV 89820
(775) 635-2610
Attn: Lura Duvall

Quantity	Description	Amount
1	Mapping Fees (See attached invoice)	$2,748.00
	Total	$2,748.00

Charge to Account # 001-006-53600

Vender # 5203

APPROVED: Lura Duvall
Elected Official or County Manager Signature

Geo-Graphics GG

PO Box 22791
Lincoln, NE 68542
Phone: 402-476-6247
e-mail: landmap@aol.com

Invoice

DATE	INVOICE #
6/5/2011	253

BILL TO	SHIP TO
Lander County Assessor 315 S. Humboldt St. Battle Mountain, NV 89820	

DUE DATE	P.O. NUMBER
7/5/2011	

ITEM	DESCRIPTION	QTY	RATE	AMOUNT
Computer Time	AutoCad Drafting and GIS updates: Austin Index and Flood Plain Index, 01-07, 01-11, 2-22, 5-44, 5-50, 7-52, 11-06, Book 2 Index, 4 CD's, 4 DVD's	42.5	60.00	2,550.00
Plotting 2BV	11"x17" bond prints	24	7.00	168.00
Shipping & Handling	2 boxes	1		30.00

PC INTERNET

COUNTY OF LANDER
SMS COMPUTING, INC

DATE	INVOICE	AMOUNT	REMARKS
06/21/11	110108979	1,980.00	06/15/11 EMAIL33X12MONTHS
06/21/11	23183	199.98	05/10/11 LOGITEC PRO R800
06/21/11	23192	443.97	05/10/11/KEYBRD/MONITOR
06/21/11	23199	259.96	05/12/11/CABLE
06/21/11	23244	986.99	05/25/11/950COMP/KWYBRD

CHECK NO 37154 $3,870.90 **

COUNTY OF LANDER
315 SOUTH HUMBOLDT STREET
BATTLE MOUNTAIN, NV 89820
(775) 635-2573

WELLS FARGO BANK
BATTLE MOUNTAIN, NV 89820
GENERAL ACCOUNT

No. 037154

94-7074
3212

VOID IF NOT CASHED WITHIN 90 DAYS

PAY TO THE ORDER OF

PC INTERNET

DATE	CHECK NO.	AMOUNT
06/23/11 **VOID**	37154 **VOID**	$3,870.90 **VOID**

VOID******3,870DOLLARS AND90CENTS***

PC INTERNET
332 S. BRIDGE STREET

WINNEMUCCA NV 89445-3111

SMS COMPUTING, INC

VOID

NON-NEGOTIABLE

LANDER COUNTY VOUCHER

Pay To: PC INTERNE T/PERFORMANCE COMPUTING
Address 332 S. BRIDGE ST
WINNEMUCCA,NV 89445

VENDOR #	3387
FUND	0
DEPT	000
EXPENSE	0

Invoice#	Invoice Description	Dept #	Expense Acct #	Amount
110108979	LANDER CO. EMAIL DOMAIN ADDRESSES	001-035	53200	$ 1,980.00
23244	950 NEW SYSTEM+KEYBRD &MOUSE	300-068	53991	$ 986.99
23192	LOGITECH KEYBRD (2)	300-068-	53920	$ 443.97
23199	PRO HD15 M/F CABLE	300-068	53920	$ 259.96
23183	LOGITECH PROF PRESENTER (2)	300-068-	53920	$ 199.98
			TOTAL	**$3,870.90**

I certify that the foregoing claim is correct and just; that the articles specified have been received by the proper officials of the County, the Courts and/or Special Districts, or the services stated have been performed; and that they were necessary for, have been or will be applied to County, Court or Special District purposes.

Authorized Signature

COUNTY COMMISSION APPROVAL

Chairman

3387-10275-75

PURCHASE ORDER

County of Lander
315 S. Humboldt Street
Battle Mountain, Nevada 89820
(775) 635-2573

DATE: 06/15/2011

P.O. # 10124

TO: PC Internet
332 S Bridge Street
Winnemucca, NV 89445
775-625-1552

SHIP TO: Lander County Assessor
315 S. Humboldt Street
Battle Mountain, NV 89820
(775) 635-2610
Attn: Lura Duvall

Quantity	Description	Amount
1	Lander County email domain addresses, landercountynv.org - 33 accounts - 12 months	$1,980.00
	(See attached Invoice #110094025)	
	Technology Fund	

Charge to Account # 001-035-53200

Vender # 3387

APPROVED: Lura Duvall
Elected Official or County Manager Signature

PC Internet

332 South Bridge Street
Winnemucca, NV 89445

Phon... (775) 625-1552
Fax # (775) 625-1553

Invoice

Date	Invoice #
6/15/2011	110108979

Bill To

LANDER COUNTY ASSESSORS OFFICE
315 S Humboldt
Battle Mountain, NV
89820

Terms	Due Date	USERID	PAYMENT FREQUENCY
Net 15	6/30/2011	lcassessor@bmnv.com	Unmetered

Quantity	Description	Rate	Amount
396	Lander County email domain addresses. landercountynv.org 33 accounts for 12 months	5.00	1,980.00

PURCHASE ORDER

County of Lander
315 S. Humboldt Street
Battle Mountain, Nevada 89820
(775) 635-2573

DATE: 05/25/2011

P.O. # 10123

TO: Performance Computing
332 S Bridge Street
Winnemucca, NV 89445
775-625-1552

SHIP TO: Lander County Assessor
315 S. Humboldt Street
Battle Mountain, NV 89820
(775) 635-2610
Attn: Lura Duvall

Quantity	Description	Amount
1	950 Computer + keyboard & mouse	$986.99
	(See attached Invoice - 23244)	
	Technology Fund	
	Total	$986.99

Charge to Account # 300-068-53991

Vender # 3387

APPROVED: Lura Duvall
Elected Official or County Manager Signature

Performance Computing

332 S BRIDGE ST
Winnemucca, NV 89445
775-625-1552 PHONE
775-625-1553 FAX

Customer Invoice

Date	Invoice #
5/25/2011	23244

Bill To
LANDER COUNTY ASSESSOR OFFICE 315 SO HUMBOLDT ST BATTLE MOUNTAIN, NV 89820

P.O. Number	Terms	Project
	Due on receipt	

Item	Quantity	Description	Rate	Amount
Misc	1	950 New System	950.00	950.00
Misc	1	Logitech Keyboard/ Mouse Combo	36.99	36.99

Performance Computing

332 S BRIDGE ST
Winnemucca, NV 89445
775-625-1552 PHONE
775-625-1553 FAX

Customer Invoice

Date	Invoice #
5/10/2011	23192

Bill To
LANDER COUNTY ASSESSOR OFFICE 315 SO HUMBOLDT ST BATTLE MOUNTAIN, NV 89820

P.O. Number	Terms	Project
	Due on receipt	

Item	Quantity	Description	Rate	Amount
097855065537	2	Logitech Keyboard K120	21.99	43.98
Misc	1	AOC 27" LCD Monitor	399.99	399.99

300-068-53920

RECEIVED

Performance Computing

332 S BRIDGE ST
Winnemucca, NV 89445
775-625-1552 PHONE
775-625-1553 FAX

Customer Invoice

Date	Invoice #
5/12/2011	23199

Bill To
LANDER COUNTY ASSESSOR OFFICE 315 SO HUMBOLDT ST BATTLE MOUNTAIN, NV 89820

P.O. Number	Terms	Project
	Due on receipt	

Item	Quantity	Description	Rate	Amount
Misc	2	25foot Pro Series HD15 M/F VGA Extension Cable	69.99	139.98
Misc	2	5m USB 2.0 Ext extension Cable	59.99	119.98

300-068-53920

Performance Computing

332 S BRIDGE ST
Winnemucca, NV 89445
775-625-1552 PHONE
775-625-1553 FAX

Customer Invoice

Date	Invoice #
5/10/2011	23183

Bill To
LANDER COUNTY ASSESSOR OFFICE 315 SO HUMBOLDT ST BATTLE MOUNTAIN, NV 89820

P.O. Number	Terms	Project
	Due on receipt	

Item	Quantity	Description	Rate	Amount
Misc	2	Logitech Professional Presenter R800	99.99	199.98

LD 300-068-53920

RECEIVED

SUMMIT ENGINEERING CORP.

COUNTY OF LANDER

DATE	INVOICE	AMOUNT	REMARKS
06/21/11	21676/52019	1,790.66	06/7/11 GIS CONSULTING
06/21/11	21677/52019	2,115.50	06/7/11 GIS CONSULTING

CHECK NO 37162 $3,906.16 **

COUNTY OF LANDER

315 SOUTH HUMBOLDT STREET
BATTLE MOUNTAIN, NV 89820
(775) 635-2573

WELLS FARGO BANK
BATTLE MOUNTAIN, NV 89820
GENERAL ACCOUNT

No. 037162

94-7074
3212

VOID IF NOT CASHED WITHIN 90 DAYS

DATE	CHECK NO.	AMOUNT
06/23/11 **VOID**	37162 **VOID**	$3,906.16 **VOID**

PAY TO THE ORDER OF

SUMMIT ENGINEERING CORP.

VOID******3,906DOLLARS AND16CENTS***

SUMMIT ENGINEERING CORP.
1150 LAMOILLE HIGHWAY

ELKO NV 89801

VOID

NON-NEGOTIABLE

207717-10283-97

PURCHASE ORDER

County of Lander
315 S. Humboldt Street
Battle Mountain, Nevada 89820
(775) 635-2573

DATE: 06/07/2011

P.O. # 10125

TO: Summit Engineering Corp
5405 Mae Anne Ave
Reno, NV 89523
775-747-8559

SHIP TO: Lander County Assessor
315 S. Humboldt Street
Battle Mountain, NV 89820
(775) 635-2610
Attn: Lura Duvall

Quantity	Description	Amount
2	GIS Consulting & Training Services	$ 2,115.50
	(See attached Invoices #21677 & 21676)	$ 1,790.66
	Total	$3,906.16

Charge to Account # 300-068-53920

Vender # 207717

APPROVED: Lura Duvall
Elected Official or County Manager Signature

SUMMIT ENGINEERING CORPORATION™

Engineering The West Since 1978.

5405 MAE ANNE AVENUE
RENO, NEVADA 89523
TELEPHONE (775) 747-8550
FAX (775) 747-8559

LANDER COUNTY ASSESSOR
315 S. HUMBOLDT STREET
BATTLE MOUNTAIN, NV 89820

Invoice number	21677
Date	6/7/2011
Client ID:	52019
Billing Manager	1023

Contract: 1-29293

GIS INSTALLATION & SUPPORT

120: INSTALLATION SERVICES

For Services Rendered Through 5-31-2011

TERMS: Due Upon Receipt

Date	Activity	Description of Labor	Hours	Amount
4/19/2011	CONSULTING	*Travel - 3.5 Reno - BM 1.0 BM - Winnemucca*	9.00	900.00
4/20/2011	CONSULTING	*Travel - 1.0 Winnemucca - BM 3.5 BM - Reno*	10.50	1,050.00
		Labor Subtotal	19.50	1,950.00

Reimbursable

Activity / Vendor		Date	Amount
GRUBE, LARRY			
TRAVEL EXPENSE	*LODGING*	4/22/2011	105.70
GRUBE, LARRY			
PER DIEM	*PER DIEM*	4/21/2011	59.80
	Reimbursable subtotal		165.50
	Invoice total		2,115.50

SUMMIT ENGINEERING CORPORATION™
Engineering The West Since 1978.

5405 MAE ANNE AVENUE
RENO, NEVADA 89523
TELEPHONE (775) 747-8550
FAX (775) 747-8559

LANDER COUNTY ASSESSOR
315 S. HUMBOLDT STREET
BATTLE MOUNTAIN, NV 89820

Invoice number	21676
Date	6/7/2011
Client ID:	52019
Billing Manager	1023

Contract: 1-29293
GIS INSTALLATION & SUPPORT
121: SUPPORT SERVICES

For Services Rendered Through 5-31-2011

TERMS: Due Upon Receipt

Date	Activity	Description of Labor	Hours	Amount
5/3/2011	CONSULTING	*Travel*	9.50	950.00
5/4/2011	CONSULTING	*ArcGIS Training* *Travel*	6.50	650.00
		ArcGIS Training		
		Labor Subtotal	16.00	1,600.00

Reimbursable

Activity / Vendor		Date	Amount
SUPER 8 MOTEL			
TRAVEL EXPENSE	*PO 5662*	5/2/2011	84.86
McGUIRE, JIM			
PER DIEM	*PER DIEM*	5/2/2011	105.80
	Reimbursable subtotal		190.66

PURCHASE ORDER

County of Lander
315 S. Humboldt Street
Battle Mountain, Nevada 89820
(775) 635-2573

DATE: 06/07/2011

P.O. # 10125

TO: Summit Engineering Corp
5405 Mae Anne Ave
Reno, NV 89523
775-747-8559

SHIP TO: Lander County Assessor
315 S. Humboldt Street
Battle Mountain, NV 89820
(775) 635-2610
Attn: Lura Duvall

Quantity	Description	Amount
2	GIS Consulting & Training Services	$ 2,115.50
	(See attached Invoices #21677 & 21676)	$ 1,790.66
	Total	$3,906.16

Charge to Account # 300-068-53920

Vender # 20717

APPROVED: Lura Duvall
Elected Official or County Manager Signature

ZONES, INC.

COUNTY OF LANDER

DATE	INVOICE	AMOUNT	REMARKS
06/21/11	B15021260101	68.72	06/10/11/MB PROJECTOR CAS
06/21/11	B15021260103	125.99	06/14/11/3YR COVRG ELECT
06/21/11	B15021260105	1,070.00	06/10/11/MOBILE PROJECTOR
06/21/11	B15050730101	130.47	06/15/11 CABLE

CHECK NO 37165 $1,395.18 **

COUNTY OF LANDER

315 SOUTH HUMBOLDT STREET
BATTLE MOUNTAIN, NV 89820
(775) 635-2573

WELLS FARGO BANK
BATTLE MOUNTAIN, NV 89820
GENERAL ACCOUNT

No. 037165

94-7074
3212

VOID IF NOT CASHED WITHIN 90 DAYS

PAY TO THE ORDER OF

ZONES, INC.

DATE	CHECK NO.	AMOUNT
06/23/11 **VOID**	37165 **VOID**	$1,395.18 **VOID**

VOID******1,395DOLLARS AND18CENTS***

ZONES, INC.
P.O. BOX 34740

SEATTLE WA 98124-1740

Void

NON-NEGOTIABLE

LANDER COUNTY VOUCHER

Pay To: ZONES INC.
Address PO BOX 34740
SEATTLE ,WA 98124-1740

VENDOR #	**8136**
FUND	300
DEPT	068
EXPENSE	

Invoice#	Invoice Description	Dept #	Expense Acct #	Amount
B15021260105	LUMEN MOBILE PROJECTOR	300-068	53991	$ 1,070.00
B15021260101	PROJECTOR CASE	300-068	53920	$ 68.72
B15050730101	50 PLUS FT OF CABLE 3.5MM	300-068	53920	$ 130.47
B15021260103	3YRS CONSUMER ELECT COVERAGE	300-068-	53920	$ 125.99
			TOTAL	**$1,395.18**

I certify that the foregoing claim is correct and just; that the articles specified have been received by the proper officials of the County, the Courts and/or Special Districts, or the services stated have been performed; and that they were necessary for, have been or will be applied to County, Court or Special District purposes.

Authorized Signature

COUNTY COMMISSION APPROVAL

Chairman

208136-10286-99

PURCHASE ORDER

County of Lander
315 S. Humboldt Street
Battle Mountain, Nevada 89820
(775) 635-2610

DATE: 06/10/2011

P.O. # 10126

TO: Wyatt McClinton
Zones, Inc
P O Box 34740
Seattle, WA 98124-1740
Phone: 800-419-9663
Fax: 253-205-2512

SHIP TO: Lander County Assessor
315 S. Humboldt Street
Battle Mountain, NV 89820
(775) 635-2610
Attn: Lura Duvall
Account #0056237969

Quantity	Description	Amount
1	InFocus IN1102 2200 Lumen WXGA Mobile Projector	$1,070.00
	(See Invoice #B15021260105)	
	Total	$1,070.00

Charge to Account # 300-068-53991

Vender # 208136

APPROVED: Lura Duvall
Elected Official or County Manager Signature

ZONES

RECEIVED
JUN 16 2011
LANDER COUNTY ASSESSOR

INVOICE

Tax ID: 91-1431894

1102 15th St SW Suite 102
Auburn, WA 98001

CR Dept. (800)570-2410
Fax: (253)205-3862

PLEASE REFER TO YOUR ACCOUNT NO., AND OUR INVOICE AND ORDER NO. IN ALL COMMUNICATIONS REGARDING THIS INVOICE

Your Account No.
0056237969

Sold To :
LANDER COUNTY ASSESSOR A/P
315 SOUTH HUMBOLDT STREET
BATTLE MOUNTAIN NV 89820
Phone : (775)635-2610

Ship To : (If other than 'Sold To')
LANDER COUNTY ASSESSOR
Lura Duvall
315 SOUTH HUMBOLDT STREET
BATTLE MOUNTAIN NV 89820
Phone : (775)635-2610

lc061011	06/10/2011
Your Purchase Order Number and Date	

Our Inv. No./Order No.	Inv. Date	Shipped Via	Date Shipped	Payment Due by 07/10/2011
B15021260105	06/10/2011	UPS GROUND	06/10/2011	

Ordered	Shipped	Item #	Description	Mfr Part #	Unit Price	Extended Price
1	1	A 02532962	InFocus IN1102 2200 Lumen WXGA 2.75lb Mobile Proje Serial Number: 1SAZWJ11200418	IN1102	1,021.00	1,021.00
1	1	A 02923620	Targus Laser Presentation Remote	AMP13US	49.00	49.00
			Thank you from JOY at Zones Thank you from JOY at Zones			

BUYER AGREES TO MAKE PAYMENT ON NET 30 TERMS. ACCOUNTS OVER 30 DAYS ARE SUBJECT TO A FINANCE CHARGE EQUAL TO 1.5% PER MONTH TO BE APPLIED TO THE UNPAID BALANCE. IF SELLER SHOULD COMMENCE ANY ACTION OR OTHERWISE SEEK TO COLLECT ANY DELINQUENT AMOUNTS DUE TO BUYER'S CREDIT ACCOUNT, BUYER AGREES TO PAY REASONABLE ATTORNEY(S) FEES, COURT COSTS AND OTHER EXPENSES, INCURRED BY SELLER, WHETHER OR NOT SUIT IS FILED. ALL RETURNS ARE SUBJECT TO 15% TO 30% RESTOCKING FEES. CUSTOMER IS ALSO RESPONSIBLE FOR THE FREIGHT ON THE RETURN.

Sales Tax	FOB	Shipping	TOTAL DUE
$0.00		$0.00	$1,070.00

√208136

ZONES™

RECEIVED
JUN 16 2011
LANDER COUNTY ASSESSOR

INVOICE

Tax ID: 91-1431894

1102 15th St SW Suite 102
Auburn, WA 98001

CR Dept. (800)570-2410
Fax: (253)205-3862

PLEASE REFER TO YOUR ACCOUNT NO., AND OUR INVOICE AND ORDER NO. IN ALL COMMUNICATIONS REGARDING THIS INVOICE

Your Account No.
0056237969

Ship To : (If other than 'Sold To')
LANDER COUNTY ASSESSOR
Lura Duvall
315 SOUTH HUMBOLDT STREET
BATTLE MOUNTAIN NV 89820
Phone : (775)635-2610

Sold To :
LANDER COUNTY ASSESSOR A/P
315 SOUTH HUMBOLDT STREET
BATTLE MOUNTAIN NV 89820
Phone : (775)635-2610

lc061011	06/10/2011
Your Purchase Order Number and Date	

Our Inv. No./Order No.	Inv. Date	Shipped Via	Date Shipped	Payment Due by 07/10/2011
B15021260101	06/10/2011	FEDEX GROUND	06/10/2011	

Ordered	Shipped	Item #	Description	Mfr Part #	Unit Price	Extended Price
1	1	A 02198391	InFocus Travel Case Mobile - Non-branded - project	CA-CASE-01-NB	52.00	52.00
			Thank you from JOY at Zones			

RECEIVED
JUN 21 2011
L.C. FINANCE

AD 300-068-53920

BUYER AGREES TO MAKE PAYMENT ON NET 30 TERMS. ACCOUNTS OVER 30 DAYS ARE SUBJECT TO A FINANCE CHARGE EQUAL TO 1.5% PER MONTH TO BE APPLIED TO THE UNPAID BALANCE. IF SELLER SHOULD COMMENCE ANY ACTION OR OTHERWISE SEEK TO COLLECT ANY DELINQUENT AMOUNTS DUE TO BUYER'S CREDIT ACCOUNT, BUYER AGREES TO PAY REASONABLE ATTORNEY(S) FEES, COURT COSTS AND OTHER EXPENSES, INCURRED BY SELLER, WHETHER OR NOT SUIT IS FILED. ALL RETURNS ARE SUBJECT TO 15% TO 30% RESTOCKING FEES. CUSTOMER IS ALSO RESPONSIBLE FOR THE FREIGHT ON THE RETURN.

Sales Tax	FOB	Shipping	TOTAL DUE
$0.00		$16.72	$68.72

ZONES™

INVOICE

Tax ID: 91-1431894

1102 15th St SW Suite 102
Auburn, WA 98001

CR Dept. (800)570-2410
Fax: (253)205-3862

PLEASE REFER TO YOUR ACCOUNT NO., AND OUR INVOICE AND ORDER NO. IN ALL COMMUNICATIONS REGARDING THIS INVOICE

Your Account No.
0056237969

Sold To :
LANDER COUNTY ASSESSOR A/P
315 SOUTH HUMBOLDT STREET
BATTLE MOUNTAIN NV 89820
Phone : (775)635-2610

Ship To : (If other than 'Sold To')
LANDER COUNTY ASSESSOR
Lura Duvall
315 SOUTH HUMBOLDT STREET
BATTLE MOUNTAIN NV 89820
Phone : (775)635-2610

lc061011	06/10/2011
Your Purchase Order Number and Date	

Our Inv. No./Order No.	Inv. Date	Shipped Via	Date Shipped	Payment Due by 07/14/2011
B15021260103	06/14/2011	OTHER	06/14/2011	

Ordered	Shipped	Item #	Description	Mfr Part #	Unit Price	Extended Price
1	1	A 05248227	3yr Cnsmr Elect Cvrg 1001-1500 EXT	133542	125.99	125.99
			Thank you from JOY at Zones			
			Thank you from JOY at Zones			

RECEIVED
JUN 20 2011
LANDER COUNTY ASSESSOR

RECEIVED
JUN 21 2011
L.C. FINANCE

300-068-53920

BUYER AGREES TO MAKE PAYMENT ON NET 30 TERMS. ACCOUNTS OVER 30 DAYS ARE SUBJECT TO A FINANCE CHARGE EQUAL TO 1.5% PER MONTH TO BE APPLIED TO THE UNPAID BALANCE. IF SELLER SHOULD COMMENCE ANY ACTION OR OTHERWISE SEEK TO COLLECT ANY DELINQUENT AMOUNTS DUE TO BUYER'S CREDIT ACCOUNT, BUYER AGREES TO PAY REASONABLE ATTORNEY(S) FEES, COURT COSTS AND OTHER EXPENSES, INCURRED BY SELLER, WHETHER OR NOT SUIT IS FILED. ALL RETURNS ARE SUBJECT TO 15% TO 30% RESTOCKING FEES. CUSTOMER IS ALSO RESPONSIBLE FOR THE FREIGHT ON THE RETURN.

Sales Tax	FOB	Shipping	TOTAL DUE
$0.00		$0.00	$125.99

ZONES™

INVOICE

Tax ID: 91-1431894

1102 15th St SW Suite 102
Auburn, WA 98001

CR Dept. (800)570-2410
Fax: (253)205-3862

PLEASE REFER TO YOUR ACCOUNT NO., AND OUR INVOICE AND ORDER NO. IN ALL COMMUNICATIONS REGARDING THIS INVOICE

Your Account No.
0056237969

Ship To : (If other than 'Sold To')
LANDER COUNTY ASSESSOR
LURA DUVALL
315 SOUTH HUMBOLDT STREET
BATTLE MOUNTAIN NV 89820
Phone : (775)635-2610

Sold To :
LANDER COUNTY ASSESSOR A/P
315 SOUTH HUMBOLDT STREET
BATTLE MOUNTAIN NV 89820
Phone : (775)635-2610

LCA0615	06/15/2011
Your Purchase Order Number and Date	

Our Inv. No./Order No.	Inv. Date	Shipped Via	Date Shipped	Payment Due by 07/15/2011
B15050730101	06/15/2011	UPS GROUND	06/15/2011	

Ordered	Shipped	Item #	Description	Mfr Part #	Unit Price	Extended Price
1	1	A 02509184	CABLE TO GO 6FT. 3.5MM STEREO AUDIO EXT. CBL M/F	40407	3.99	3.99
1	1	A 03088769	50FT CMG RATED SXGA+3.5MM M/M CABLE	40157	111.99	111.99

300-068-53920

RECEIVED
JUN 20 2011
LANDER COUNTY ASSESSOR

RECEIVED
JUN 21 2011
L.C. FINANCE

BUYER AGREES TO MAKE PAYMENT ON NET 30 TERMS. ACCOUNTS OVER 30 DAYS ARE SUBJECT TO A FINANCE CHARGE EQUAL TO 1.5% PER MONTH TO BE APPLIED TO THE UNPAID BALANCE. IF SELLER SHOULD COMMENCE ANY ACTION OR OTHERWISE SEEK TO COLLECT ANY DELINQUENT AMOUNTS DUE TO BUYER'S CREDIT ACCOUNT, BUYER AGREES TO PAY REASONABLE ATTORNEY(S) FEES, COURT COSTS AND OTHER EXPENSES, INCURRED BY SELLER, WHETHER OR NOT SUIT IS FILED. ALL RETURNS ARE SUBJECT TO 15% TO 30% RESTOCKING FEES. CUSTOMER IS ALSO RESPONSIBLE FOR THE FREIGHT ON THE RETURN.

Sales Tax	FOB	Shipping	TOTAL DUE
$0.00		$14.49	$130.47

ROGENE HILL
Lander County Finance Director

ACKNOWLEDGEMENT OF REVIEW & AUTHORIZATION — DATE

Steven Stienel — Chairman — 6/28/11
Dean Bullock — Commissioner — 6/28/11
David R Mason — Commissioner — 6/28/11
Commissioner
Commissioner

LANDER COUNTY COMMISSION MEETING

June 28th, 2011

APPROVE / DISAPPROVE
SUBMITTED EXPENDITURES IN THE AMOUNT OF $94,841.79
From Check #37166 thru#37197

315 South Humboldt Street ◄ ► Battle Mountain NV 89820
Phone: (775) 635-2885 ◄ ► Fax: (775) 635-5332

COUNTY OF LANDER

ZONES, INC.

DATE	INVOICE	AMOUNT	REMARKS
06/21/11	B15021260101	68.72	06/10/11/MB PROJECTOR CAS
06/21/11	B15021260103	125.99	06/14/11/3YR COVRG ELECT
06/21/11	B15021260105	1,070.00	06/10/11/MOBILE PROJECTOR
06/21/11	B15050730101	130.47	06/15/11 CABLE

CHECK NO 37165 $1,395.18 **

COUNTY OF LANDER
315 SOUTH HUMBOLDT STREET
BATTLE MOUNTAIN, NV 89820
(775) 635-2573

WELLS FARGO BANK
BATTLE MOUNTAIN, NV 89820
GENERAL ACCOUNT

No. 037165

94-7074
3212

VOID IF NOT CASHED WITHIN 90 DAYS

PAY TO THE ORDER OF

ZONES, INC.

DATE	CHECK NO.	AMOUNT
06/23/11 **VOID**	37165 **VOID**	$1,395.18 **VOID**

VOID******1,395DOLLARS AND18CENTS***

ZONES, INC.
P.O. BOX 34740

SEATTLE WA 98124-1740

NON-NEGOTIABLE

LANDER COUNTY VOUCHER

Pay To: **ZONES INC.**
Address PO BOX 34740
SEATTLE ,WA 98124-1740

VENDOR #	**208136**
FUND	300
DEPT	068
EXPENSE	

Invoice#	Invoice Description	Dept #	Expense Acct #	Amount
B15021260105	LUMEN MOBILE PROJECTOR	300-068	53991	$ 1,070.00
B15021260101	PROJECTOR CASE	300-068	53920	$ 68.72
B15050730101	50 PLUS FT OF CABLE 3.5MM	300-068	53920	$ 130.47
B15021260103	3YRS CONSUMER ELECT COVERAGE	300-068-	53920	$ 125.99
			TOTAL	**$1,395.18**

I certify that the foregoing claim is correct and just; that the articles specified have been received by the proper officials of the County, the Courts and/or Special Districts, or the services stated have been performed; and that they were necessary for, have been or will be applied to County, Court or Special District purposes.

COUNTY COMMISSION APPROVAL

Chairman

Authorized Signature

Date

COUNTY OF LANDER

SUMMIT ENGINEERING CORP.

DATE	INVOICE	AMOUNT	REMARKS
06/21/11	21676/52019	1,790.66	06/7/11 GIS CONSULTING
06/21/11	21677/52019	2,115.50	06/7/11 GIS CONSULTING

CHECK NO 37162 $3,906.16 **

COUNTY OF LANDER

315 SOUTH HUMBOLDT STREET
BATTLE MOUNTAIN, NV 89820
(775) 635-2573

WELLS FARGO BANK
BATTLE MOUNTAIN, NV 89820
GENERAL ACCOUNT

No. 037162

94-7074
3212

VOID IF NOT CASHED WITHIN 90 DAYS

PAY TO THE ORDER OF

SUMMIT ENGINEERING CORP.

DATE	CHECK NO.	AMOUNT
06/23/11 **VOID**	37162 **VOID**	$3,906.16 **VOID**

VOID******3,906DOLLARS AND16CENTS***

SUMMIT ENGINEERING CORP.
1150 LAMOILLE HIGHWAY

ELKO NV 89801

VOID

NON-NEGOTIABLE

	Total	$3,906.16

Charge to Account # 300-068-53920

Vender # 207717

APPROVED:

Elected Official or County Manager Signature

Department Head or other Authorized Signature

FINANCE DEPARTMENT ONLY
Entered Computer

Steve Stienmetz
Dean Bullock
David R. Mason

COUNTY OF LANDER
DBA:GEO GRAPHICS

PATRICK R WOTRUBA

DATE	INVOICE	AMOUNT	REMARKS
06/21/11	253	2,748.00	06/05/11 AUTOCAD/GIS UPDT

CHECK NO 37144 $2,748.00 **

COUNTY OF LANDER
315 SOUTH HUMBOLDT STREET
BATTLE MOUNTAIN, NV 89820
(775) 635-2573

WELLS FARGO BANK
BATTLE MOUNTAIN, NV 89820
GENERAL ACCOUNT

No. 037144

94-7074
3212

VOID IF NOT CASHED WITHIN 90 DAYS

PAY TO THE ORDER OF

PATRICK R WOTRUBA

DATE	CHECK NO.	AMOUNT
06/23/11 **VOID**	37144 **VOID**	$2,748.00 **VOID**

VOID******2,748DOLLARS AND00CENTS***

PATRICK R WOTRUBA
P.O. BOX 22791
1140 W LEON DR.
LINCOLN NE 68542-2791

DBA:GEO GRAPHICS

VOID

NON-NEGOTIABLE

	Total	**$2,748.00**

Charge to Account # 001-006-53600

Vender # 3203

APPROVED:

Elected Official or County Manager Signature

Department Head or other Authorized Signature

FINANCE DEPARTMENT ONLY
Entered Computer

Ste Stienert
Dan Bullock
David R Mason

COUNTY OF LANDER

ESRI, INC.

DATE	INVOICE	AMOUNT	REMARKS
06/21/11	92326840/312438	1,800.00	04/19/11/ARCVIEW UPGRD

CHECK NO 37142 $1,800.00 **

COUNTY OF LANDER
315 SOUTH HUMBOLDT STREET
BATTLE MOUNTAIN, NV 89820
(775) 635-2573

WELLS FARGO BANK
BATTLE MOUNTAIN, NV 89820
GENERAL ACCOUNT

No. 037142

94-7074
3212

VOID IF NOT CASHED WITHIN 90 DAYS

PAY TO THE ORDER OF

ESRI, INC.

DATE	CHECK NO.	AMOUNT
06/23/11 **VOID**	37142 **VOID**	$1,800.00 **VOID**

VOID******1,800DOLLARS AND00CENTS***

ESRI, INC.
380 NEW YORK STREET

REDLANDS CA 92373

VOID

NON-NEGOTIABLE

	Assessor Technology Fund	
	Total	**$1,800.00**

Charge to Account # 300-68-53920

Vender #

APPROVED:

Elected Official or County Manager Signature

Department Head or other Authorized Signature

FINANCE DEPARTMENT ONLY
Entered Computer

Steven Stienmetz
Dean Bullock
David R Mason

RECEIVED
JUN 21 2011
L.C. FINANCE

COUNTY OF LANDER

SMS COMPUTING, INC

PC INTERNET

DATE	INVOICE	AMOUNT	REMARKS
06/21/11	110108979	1,980.00	06/15/11 EMAIL33X12MONTHS
06/21/11	23183	199.98	05/10/11 LOGITEC PRO R800
06/21/11	23192	443.97	05/10/11/KEYBRD/MONITOR
06/21/11	23199	259.96	05/12/11/CABLE
06/21/11	23244	986.99	05/25/11/950COMP/KWYBRD

CHECK NO 37154 $3,870.90 **

COUNTY OF LANDER
315 SOUTH HUMBOLDT STREET
BATTLE MOUNTAIN, NV 89820
(775) 635-2573

WELLS FARGO BANK
BATTLE MOUNTAIN, NV 89820
GENERAL ACCOUNT

No. 037154

94-7074
3212

VOID IF NOT CASHED WITHIN 90 DAYS

PAY TO THE ORDER OF

PC INTERNET

DATE	CHECK NO.	AMOUNT
06/23/11 **VOID**	37154 **VOID**	$3,870.90 **VOID**

VOID******3,870DOLLARS AND90CENTS***

SMS COMPUTING, INC

PC INTERNET
332 S. BRIDGE STREET

WINNEMUCCA NV 89445-3111

VOID
NON-NEGOTIABLE

LANDER COUNTY VOUCHER

Pay To: **PC INTERNE T/PERFORMANCE COMPUTING**
Address 332 S. BRIDGE ST
WINNEMUCCA,NV 89445

VENDOR #	**3387**
FUND	0
DEPT	000
EXPENSE	0

Invoice#	Invoice Description	Dept #	Expense Acct #	Amount
110108979	LANDER CO. EMAIL DOMAIN ADDRESSES	001-035	53200	$ 1,980.00
23244	950 NEW SYSTEM+KEYBRD &MOUSE	300-068	53991	$ 986.99
23192	LOGITECH KEYBRD (2)	300-068-	53920	$ 443.97
23199	PRO HD15 M/F CABLE	300-068	53920	$ 259.96
23183	LOGITECH PROF PRESENTER (2)	300-068-	53920	$ 199.98
			TOTAL	**$3,870.90**

I certify that the foregoing claim is correct and just; that the articles specified have been received by the proper officials of the County, the Courts and/or Special Districts, or the services stated have been performed; and that they were necessary for, have been or will be applied to County, Court or Special District purposes.

COUNTY COMMISSION APPROVAL

Chairman

Authorized Signature

Date

COUNTY OF LANDER

COMPUTERLAND OF RENO

DATE	INVOICE	AMOUNT	REMARKS
06/21/11	RNZ0057939	2,930.89	05/09/11/CISCO ROUTERS
06/21/11	RNZ0057959	68.00	05/11/11/SMARTNET SERVC
06/21/11	RNZ0057963	1,236.00	05/12/11/ELITE 8200 COMP
06/21/11	RNZ0057964	138.00	05/12/11/SMARTNET REPLAC
06/21/11	RNZ0057981	218.00	05/16/11/QUICKBKS/INTUIT
06/21/11	RNZ0058001 PARTS	77.87	05/18/11 HP4GB DDR3-133
06/21/11	RNZ0058063	2,189.00	06/03/11/HP8200AUSTIN JC

CHECK NO 37141 $6,857.76 **

COUNTY OF LANDER
315 SOUTH HUMBOLDT STREET
BATTLE MOUNTAIN, NV 89820
(775) 635-2573

WELLS FARGO BANK
BATTLE MOUNTAIN, NV 89820
GENERAL ACCOUNT

No. 037141

94-7074
3212

VOID IF NOT CASHED WITHIN 90 DAYS

DATE	CHECK NO.	AMOUNT
06/23/11 **VOID**	37141 **VOID**	$6,857.76 **VOID**

PAY TO THE ORDER OF

COMPUTERLAND OF RENO

VOID******6,857DOLLARS AND76CENTS***

COMPUTERLAND OF RENO
P.O. BOX 10560

RENO NV 89510-0560

VOID

NON-NEGOTIABLE

LANDER COUNTY VOUCHER

Pay To: **ComputerLand Reno**
Address 1315 Greg St.
Sparks,Nv 89431

VENDOR #	**208160**
FUND	0
DEPT	000
EXPENSE	0

Invoice#	Invoice Description	Dept #	Expense Acct #	Amount
RNZ0057963	HP ELITE 8200/MONITOR	300-068	53991	$ 1,236.00
RNZ0057981	INTUIT QUICKBOOKS 2011	300-068-	53920	$ 218.00
RNZ0058063	HP ELITE 8200/MONITOR (2)	300-068-	53991	$ 2,189.00
RNZ0057939	CISCO ROUTERS	300-068	53991	$ 2,930.89
RNZ0057959	SMARTNET SERVICE AGR	300-068-	53920	$ 68.00
RNZ0057964	SMARTNET SERVICE / REPACEMENT-2	300-068-	53920	$ 138.00
RNZ0058001	HP 4GB DDR3-133 SODIMM	001-006	53920	$ 77.87
			TOTAL	**$6,857.76**

I certify that the foregoing claim is correct and just; that the articles specified have been received by the proper officials of the County, the Courts and/or Special Districts, or the services stated have been performed; and that they were necessary for, have been or will be applied to County, Court or Special District purposes.

COUNTY COMMISSION APPROVAL

Chairman

Authorized Signature

Date

Commissioners' Report

June 28, 2011